ТАРГЕТ

МЕБЕЛЬНАЯ ФУРНИТУРА 2027

V.1.0

精诺 JINIO

Техническое руководство по продуктам

Вот уже более 8 лет компания **ТАРГЕТ** обеспечивает производителей мебели качественной фурнитурой из разных стран. Мы поставляем продукцию из Европы и Китая. За годы работы мы заслужили доверие наших клиентов высоким уровнем сервиса, комфортными условиями сотрудничества, бесперебойностью поставок, привлекательными ценами на нашу продукцию. 2024 год стал для нашей компании знаковым – мы начали свое сотрудничество с китайским производителем фурнитуры под брендом **JINO (JINIO)**. Компания **ТАРГЕТ** получила право эксклюзивных продаж продукции **JINO (JINIO)** на территории Российской Федерации, Грузии, Армении и Беларуси. Продукция данного бренда уникальна.

JINO – это современное промышленное предприятие, объединяющее исследования и разработки, производство и продажи. **JINIO** производит оригинальную фурнитуру и имеет международные патенты, внедряет модель бережливого производства, а также системы управления на месте 5S и TPM, что позволяет свести уровень брака к нулю, в то же время постоянно совершенствовать методы работы. Каждое звено - от закупки сырья, разработки технологических процессов, производства, контроля качества до функционального тестирования продукции - отвечает самым высоким требованиям, а производство полностью автоматизировано и стандартизировано для повышения качества продукции.

Дизайн оригинальной мебельной фурнитуры **JINIO** полностью соответствует современному тренду, направленному на минимализм и незаметность. Продукция соответствуют европейскому стандарту и национальному стандарту GB/T28203-2011.

ПОЧЕМУ СТОИТ ВЫБРАТЬ JINIO?

1. Полностью запатентованная продукция. Подделка патентной продукции недопустима.

2. Только оригинальные продукты. **JINIO** производят только те продукты, которые разработаны ими самими или оптимизируют существующие продукты. Качество подтверждено международными сертификатами.

3. JINIO продаётся по всему миру и строго требует неукоснительного соблюдения правила: один агент в одной стране.

Предлагаем Вам начать знакомство с брендом **JINO (JINIO)** в данном каталоге.

РОССИЙСКАЯ ФЕДЕРАЦИЯ

ПАТЕНТ

НА ИЗОБРЕТЕНИЕ

№ 2842355

СОЕДИНИТЕЛЬНЫЙ БОЛТ, СОЕДИНИТЕЛЬНЫЙ УЗЕЛ И СОЕДИНИТЕЛЬНАЯ СИСТЕМА

Патентообладатель: ***ГУАНЧЖОУ ЦЗИНИО ТЕКНОЛОДЖИ ДЕВЕЛОПМЕНТ КО., ЛТД. (CN)***

Авторы: ***ЛИНЬ, Сяоцюнь (CN), ЛИНЬ, Сяохуань (CN), СУ, Вэйшэн (CN), ГО, Юйу (CN)***

Заявка № **2024116760**
Приоритет изобретения **09 января 2022 г.**
Дата государственной регистрации
в Государственном реестре изобретений
Российской Федерации **24 июня 2025 г.**
Срок действия исключительного права
на изобретение истекает **20 декабря 2042 г.**

Руководитель Федеральной службы
по интеллектуальной собственности

ДОКУМЕНТ ПОДПИСАН ЭЛЕКТРОННОЙ ПОДПИСЬЮ
Сертификат 0692e7c1a6300bf54f240f670bca2026
Владелец **Зубов Юрий Сергеевич**
Действителен с 10.07.2024 по 03.10.2025

Ю.С. Зубов

精诺 JINIO

Авторизация бренда

Certificate Of Authorization

Настоящим уполномочиваю:

ООО «ТАРГЕТ»

быть эксклюзивным стратегическим партнером компании «Guangzhou Jinio Technology Development Co., Ltd.»! Продукция компании, включая соединительные элементы для мебели, лицензирована. Территория действия лицензии: Россия, Беларусь, Армения, Грузия.

Срок действия лицензии: с 1 января 2025 г. по 31 декабря 2028 г.

Заявление:

1. Срок действия лицензии составляет 4 года и автоматически прекращается по истечении срока действия. Для вступления лицензии в силу она должна быть скреплена официальной печатью.
2. Лицензия не подлежит передаче или продаже.
3. Окончательное право толкования настоящей лицензии принадлежит компании «Guangzhou Jinio Technology Development Co., Ltd.»

Уполномоченное подразделение:
GuangZhou JINIO Technology Development Co.,Ltd
Дата авторизации:
1 января 2025 г.

GUANGZHOU JINIO TECHNOLOGY DEVELOPMENT CO.,LTD.

Стяжка эксцентриковая J6-8

Запатентованная продукция, подделка НЕ ДОПУСКАЕТСЯ

Материал: сталь с гальваническим покрытием, пластик

Диаметр эксцентрика: 8 мм

Предназначен для плит: от 14 мм и более

Сертификат испытаний SGS (Швейцария)



Схема установки

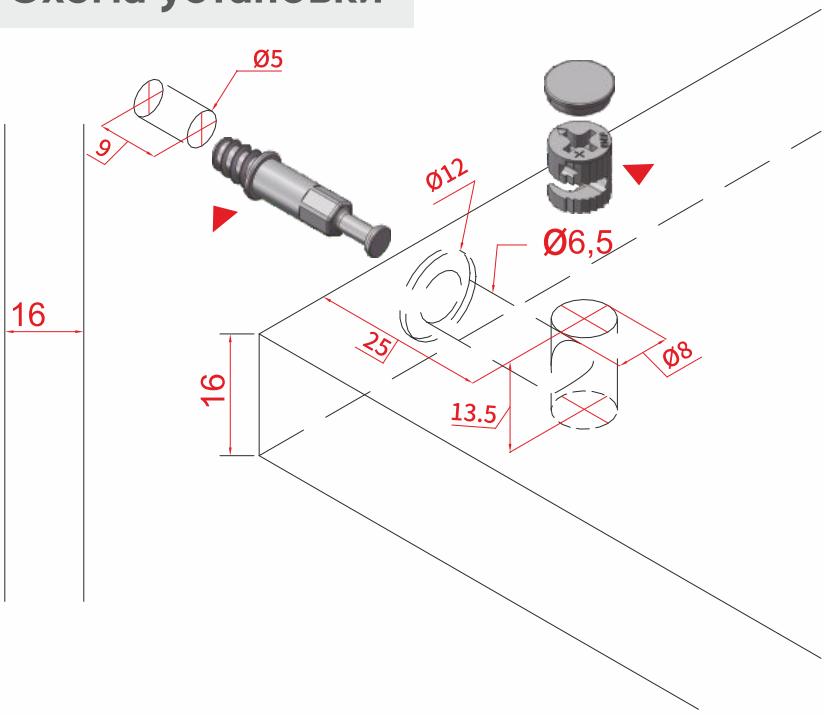



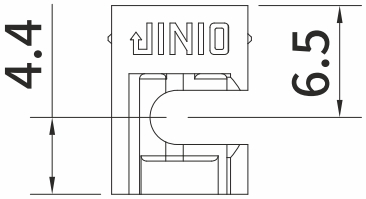

Jinio J6-8 Эксцентрик D8 мм
Арт.1208001
= 100 уп. по 100 шт.

Сверление:
глухое сверло 8x70

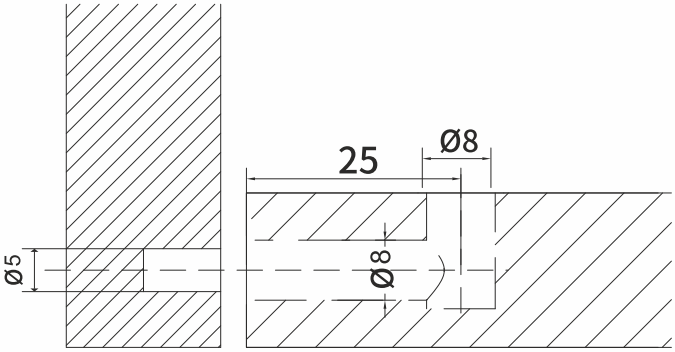

Сверление:
сверло 6,5x25+12x70

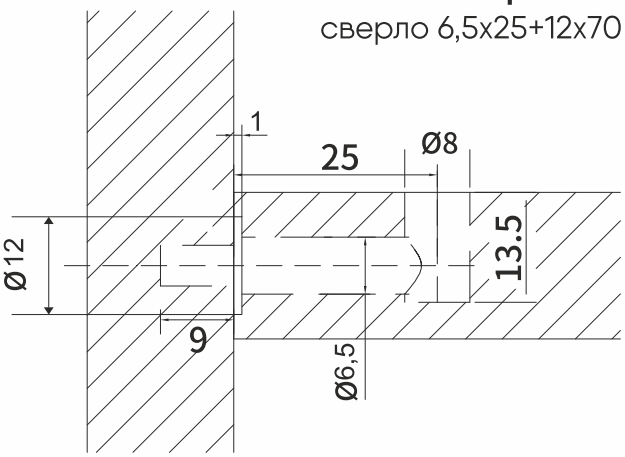

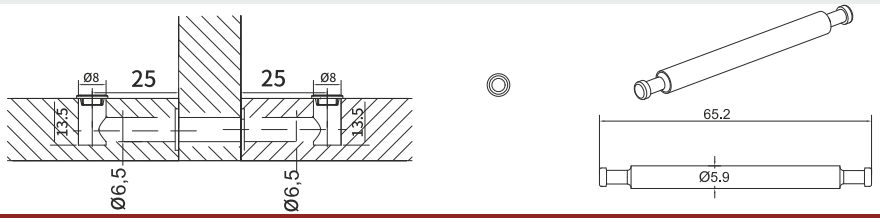

Jinio J6-8
Шток эксцентрика двусторонний

Арт.0000076

=ИНДИВИДУАЛЬНАЯ

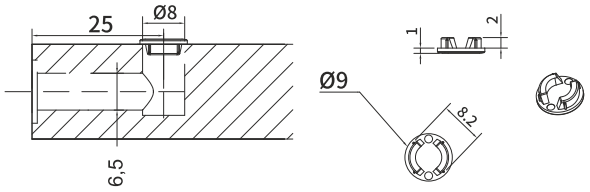

11 - черный никель
12 - никель
A - белый
B - серый
D - бежевый
E - коричневый

Jinio J6-8 Заглушка эксцентрика

Арт. 6000801-**11 12 A B D E**

= 500 уп. по 100 шт.

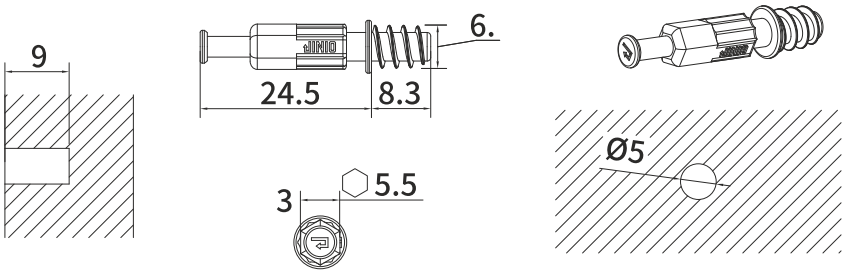

Jinio J6-8
Шток эксцентрика евровинт

Арт. 0000802

= 100 уп. по 100 шт.

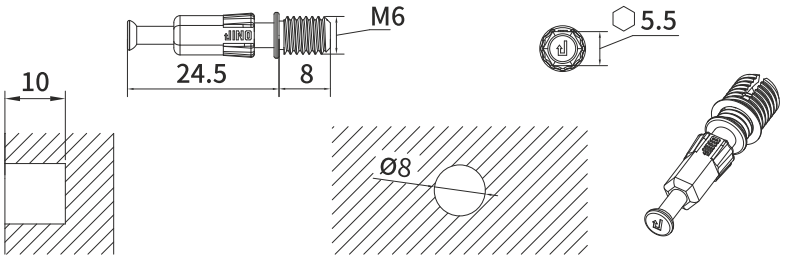

Jinio J6-8 Шток эксцентрика
с резьбой M6 и футоркой D8 мм

Арт. 0000801Z04

= 100 уп. по 100 шт.

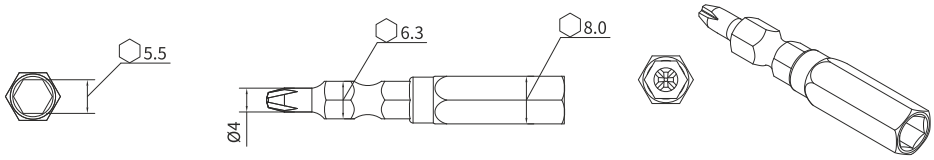

Jinio J6-8
Бита для сборки

Арт. 0000560-1

= ИНДИВИДУАЛЬНАЯ

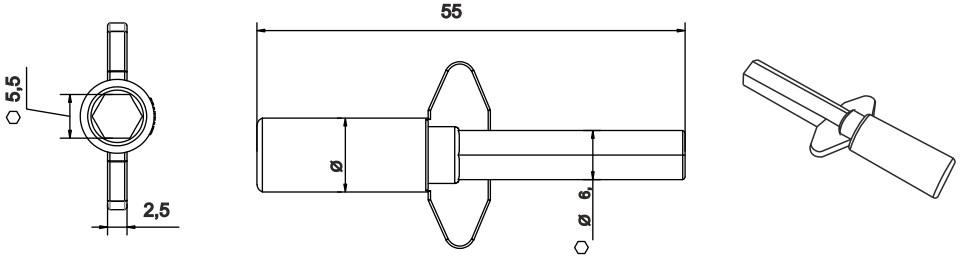

Jinio J6-8 Пластиковая
бита для сборки

Арт. 0000560-2

= ИНДИВИДУАЛЬНАЯ

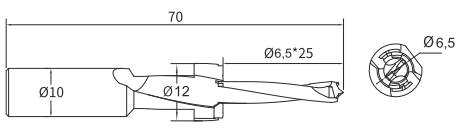

Jinio J6-8 Сверло
6,5*25+12*70 правое

Арт. 0000610-07

= ИНДИВИДУАЛЬНАЯ

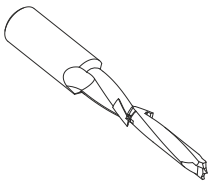

Jinio J6-8 Сверло
6,5*25+12*70 левое

Арт. 0000610-08

= ИНДИВИДУАЛЬНАЯ

Схема установки

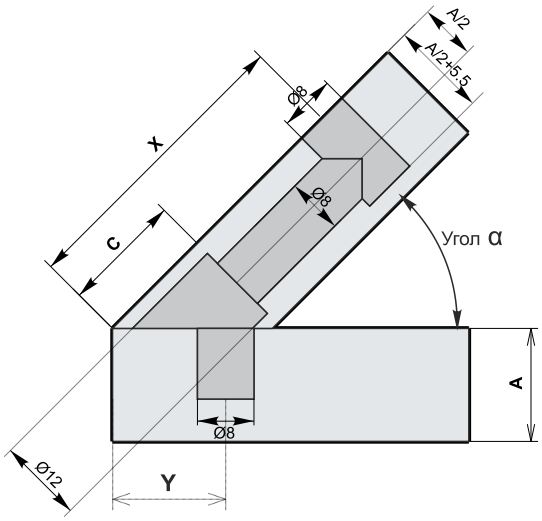

Значение присадок в зависимости от толщины плиты и угла соединения

Угол α	A											
	16мм			18мм			22мм			25мм		
	X	Y	C	X	Y	C	X	Y	C	X	Y	C
30°	50.6	24.1	25.6	51.6	25.5	26.6	55.8	30.1	30.8	58.4	33.1	33.4
35°	47	20.7	22	48.4	22.4	23.4	51.3	25.9	26.3	53.4	28.5	28.4
40°	44.4	18	19.4	45.4	19.6	20.4	47.8	22.7	22.8	49.7	25.2	24.7
45°	42	16	17	43	17.4	18	45	20.3	20	46.5	22.4	21.5
50°	40.2	14.4	15.2	41	15.7	16	42.7	18.3	17.7	44	20.3	19
55°	38.7	13.1	13.7	39.4	14.3	14.4	40.8	16.7	15.8	41.8	18.6	16.8
60°	37.4	12	12.4	38	13.1	13	39.1	15.4	14.1	40	17.1	15
65°	36.3	11	11.3	36.7	12.1	11.7	37.7	14.3	12.7	38.4	16	13.4
70°	35.3	10.2	10.3	35.6	11.3	10.6	36.4	13.4	11.4	36.9	15	11.9
75°	34.4	9.5	9.4	34.6	10.6	9.6	35.2	12.6	10.2	35.6	14.2	10.6
80°	33.5	9	8.5	33.7	10	8.7	34.1	12	9.1	34.3	13.5	9.3
85°	32.8	8.4	7.8	32.9	9.4	7.9	33	11.5	8	33.2	13	8.2
90°	32	8	7	32	9	7	32	11	7	32	12.5	7

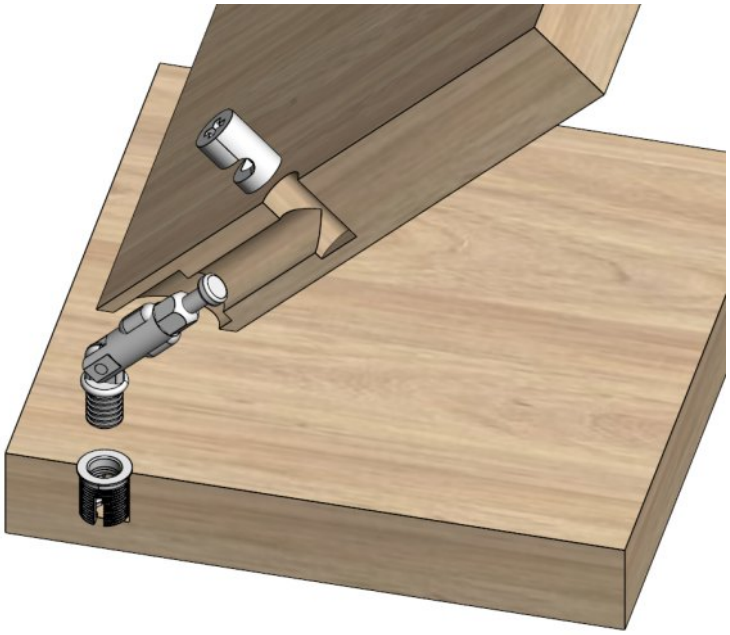

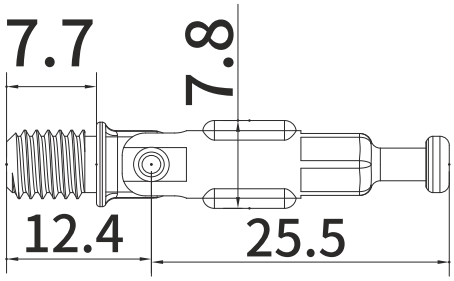

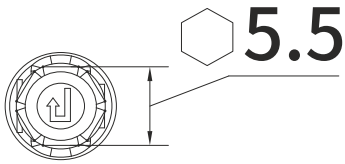

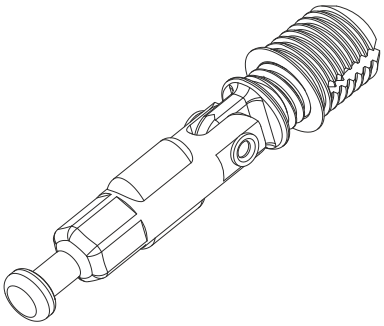

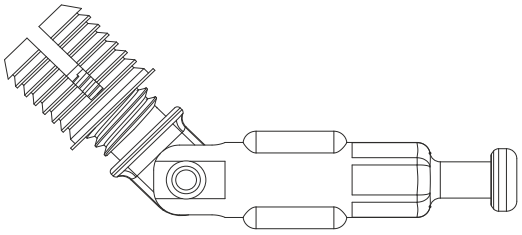

Jinio J6-8 Шток эксцентрика угловой односторонний

Арт.0000055-8

ИНДИВИДУАЛЬНАЯ

精诺 JINIO

ТАРГЕТ

Схема установки

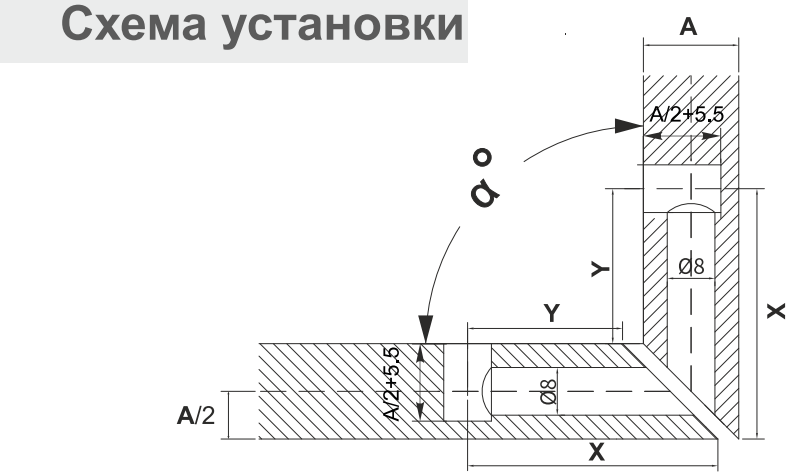

Значение присадок в зависимости от толщины плиты и угла соединения

Угол α	A							
	16мм		18мм		22мм		25мм	
	X	Y	X	Y	X	Y	X	Y
90°	42	26	43	25	45	23	46.5	21.5
100°	40.7	27.3	41.6	26.4	43.2	24.8	44.5	23.5
110°	39.6	28.4	40.3	27.7	41.7	26.3	42.8	25.2
120°	38.6	29.4	39.2	28.8	40.4	27.6	41.2	26.8
130°	37.7	30.3	38.2	29.8	39.1	28.9	39.8	28.2
135°	37.3	30.7	37.7	30.3	38.6	29.4	39.2	28.8
140°	36.9	31.1	37.3	30.7	38	30	38.6	29.4
150°	36.1	31.9	36.4	31.6	37	31	37.3	30.7
160°	35.4	32.6	35.6	32.4	35.9	32.1	36.2	31.8
170°	34.7	33.3	34.8	33.2	35	33	35.1	32.9
180°	34	34	34	34	34	34	34	34

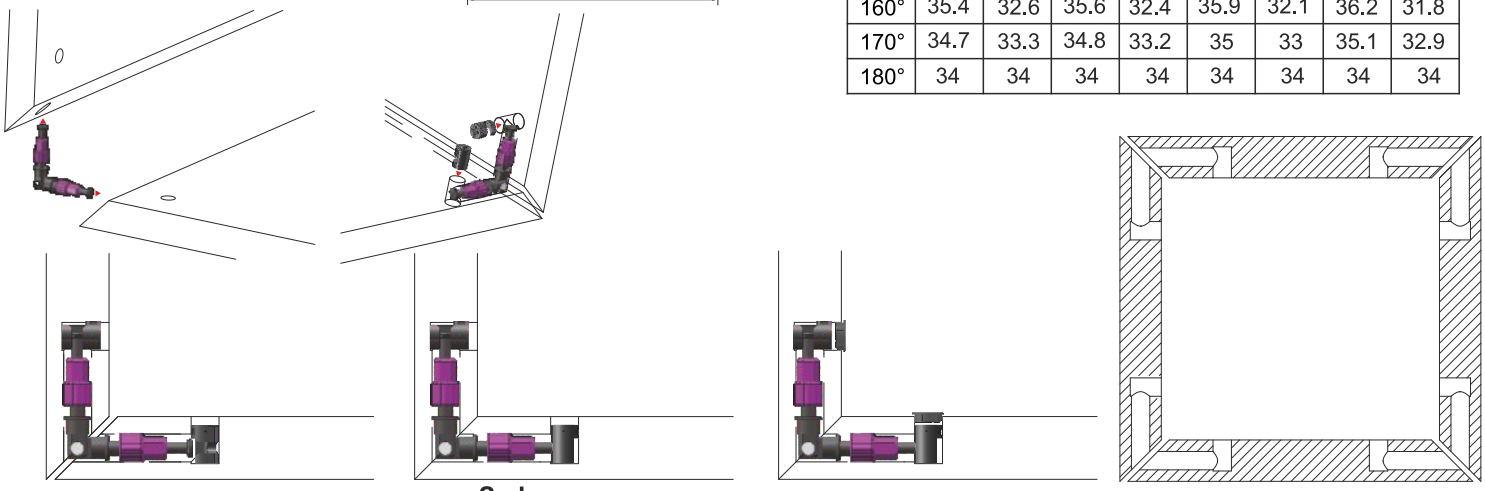

Зафиксировано

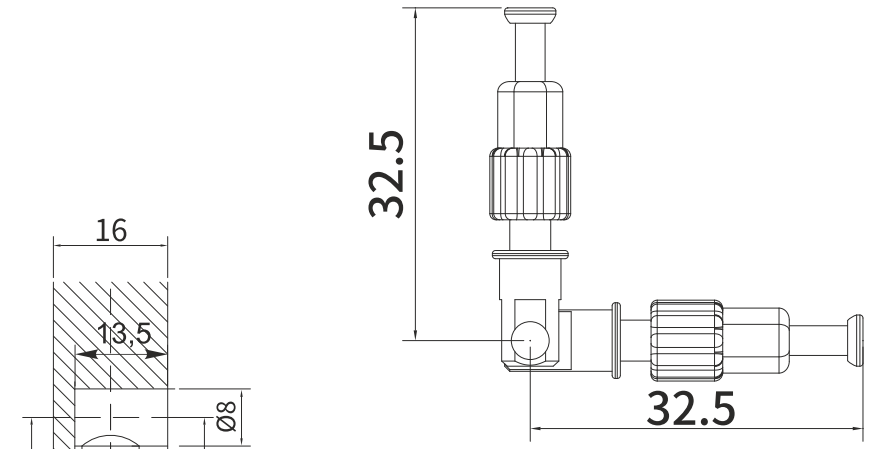

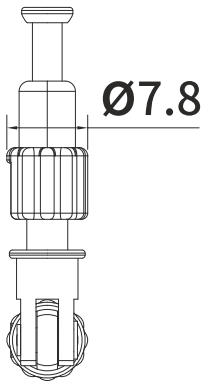

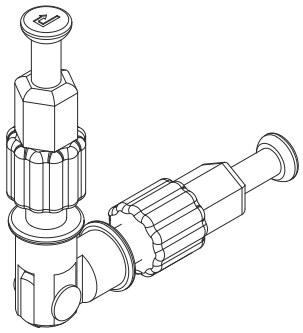

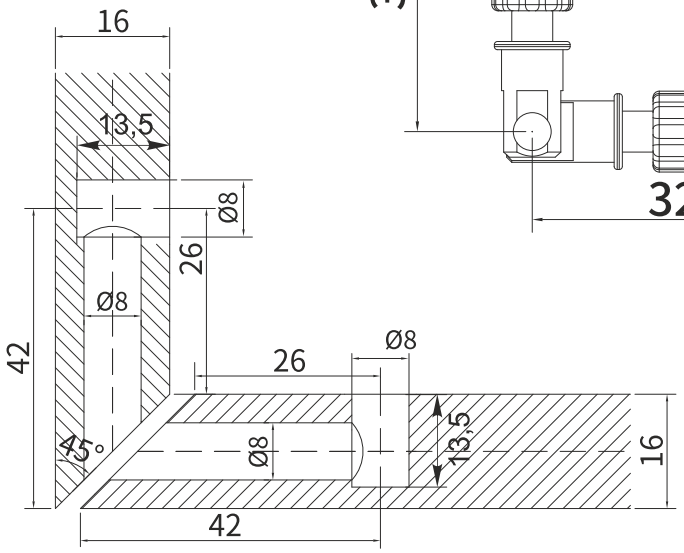

Jinio J6-8 Шток эксцентрика угловой двусторонний

Арт. 0000067

ИНДИВИДУАЛЬНАЯ

Стяжка эксцентриковая J6-10B

Запатентованная продукция, подделка НЕ ДОПУСКАЕТСЯ

Материал: Экологически чистый цинковый сплав, сталь с гальваническим покрытием, пластик

Диаметр эксцентрика: 10 мм
Предназначен для плит: от 9 мм и более

Сертификат испытаний SGS (Швейцария)



Схема установки

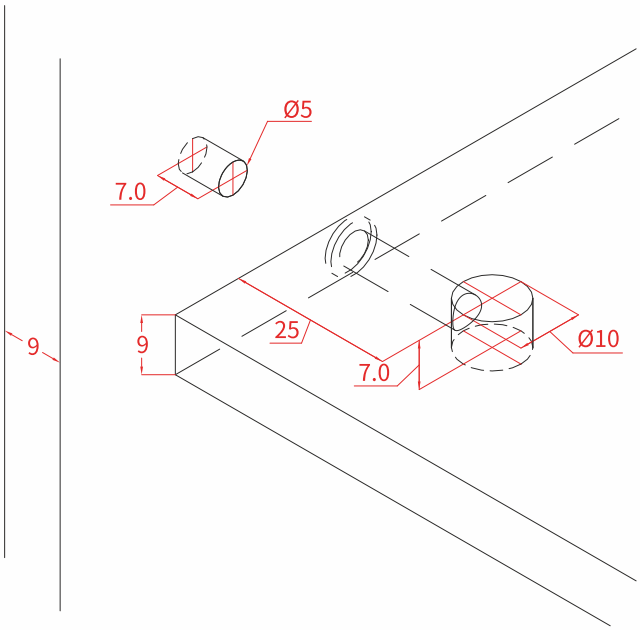

Сверление: сверло 5x25+6,5x70

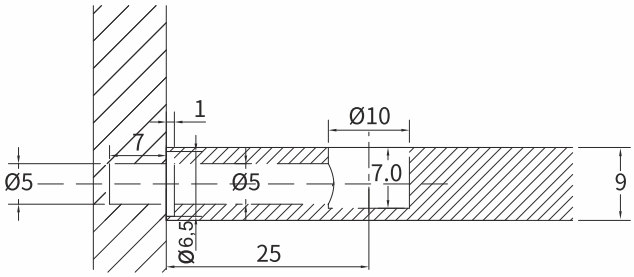

Сверление: глухое сверло 5x70

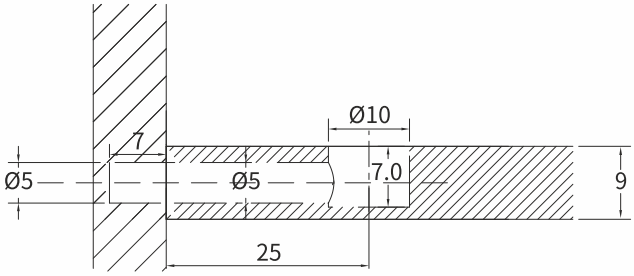

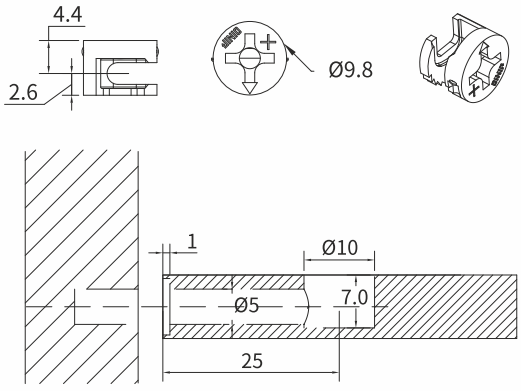

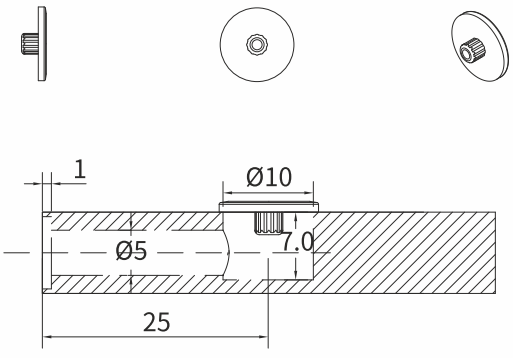

Jinio J6-10B Эксцентрик D10 мм
Арт.6001000B
= 100 уп. по 100 шт.

Jinio J6-10B Заглушка эксцентрика белый
Арт.6001002Y-A
= 500 уп. по 100 шт.

Jinio J6-10B Заглушка эксцентрика черный никель
Арт.6001002Y-C
= 500 уп. по 100 шт.

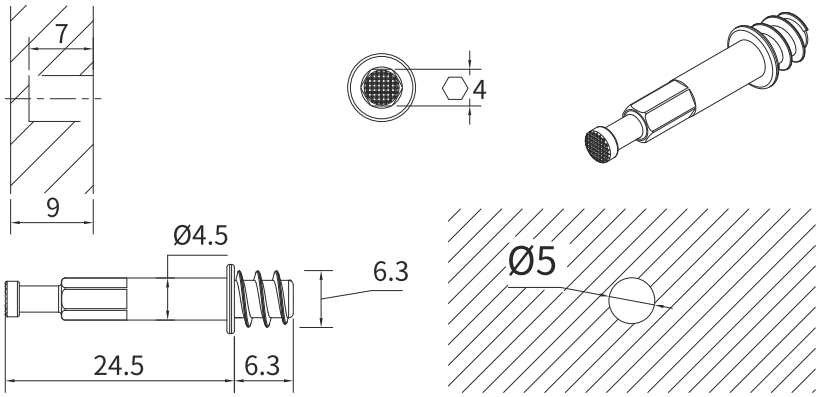

Jinio J6-10B
Шток эксцентрика евровинт
Арт.0000069
= 50 уп. по 100 шт.

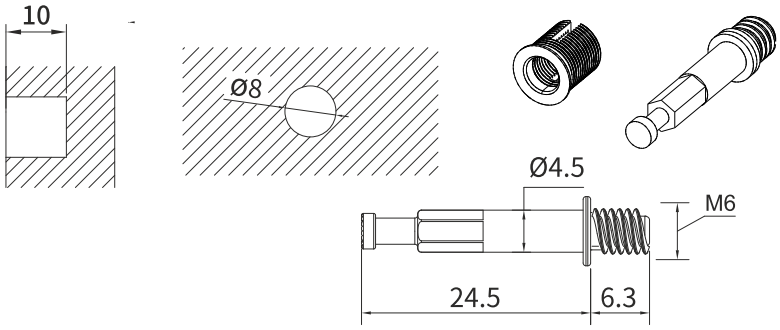

Jinio J6-10B
Шток эксцентрика с резьбой M6
и футоркой D8 мм
Арт.0000068
= 50 уп. по 100 шт.

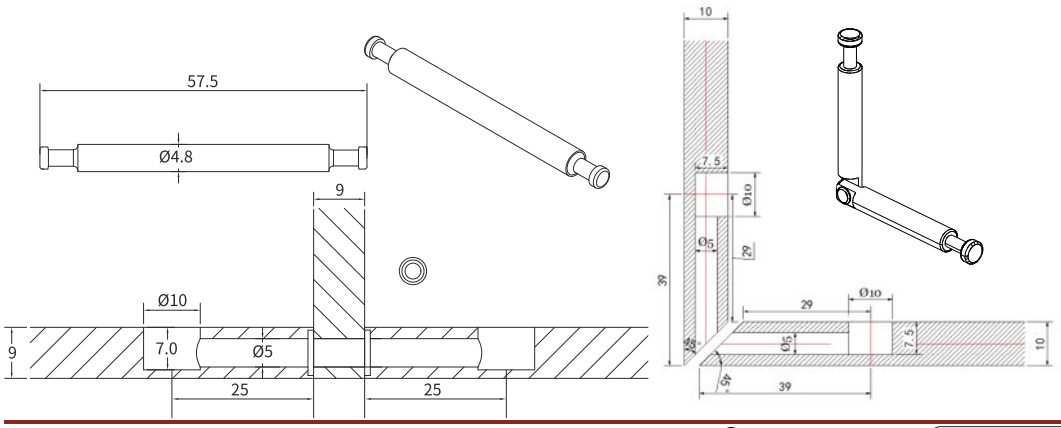

Jinio J6-10B
Шток эксцентрика угловой
двусторонний
Арт.0000078
= 50 уп. по 100 шт.

Jinio J6-10B
Шток эксцентрика двусторонний
Арт. 0000070
=ИНДИВИДУАЛЬНАЯ

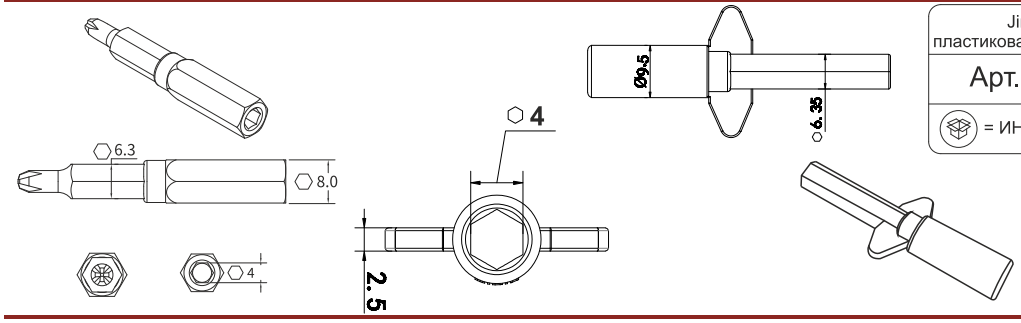

Jinio J6-10B
пластиковая бита для сборки
Арт. 0000562-1
= ИНДИВИДУАЛЬНАЯ

Jinio J6-10B Бита для сборки
Арт. 0000562
= ИНДИВИДУАЛЬНАЯ

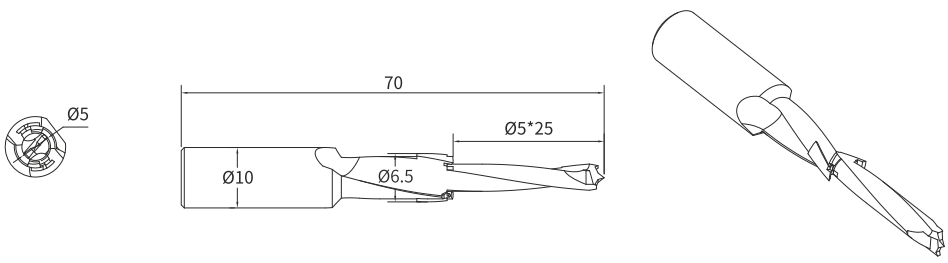

Jinio J6-10B
Сверло 5*25+7,5*70 правое
Арт. 0000610-28
= ИНДИВИДУАЛЬНАЯ

Jinio J6-10B
Сверло 5*25+7,5*70 левое
Арт. 0000610-27
= ИНДИВИДУАЛЬНАЯ

Стяжка эксцентриковая J6-15

Материал: сталь с гальваническим покрытием, пластик

Диаметр эксцентрика: 15 мм

Предназначен для плит: от 14 мм и более

Сертификат испытаний SGS (Швейцария)

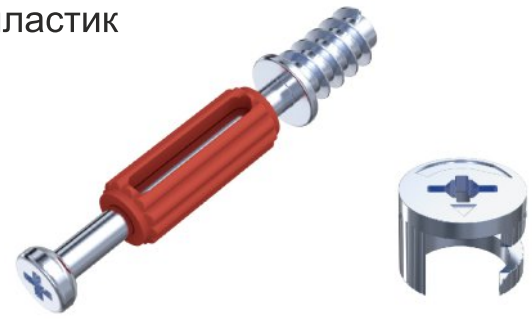

Схема установки

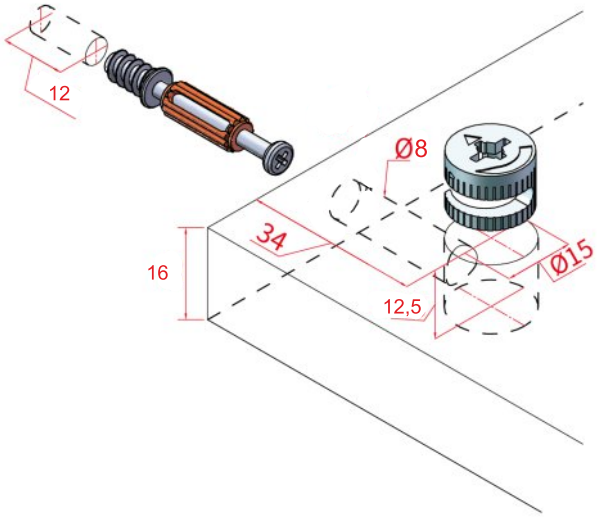

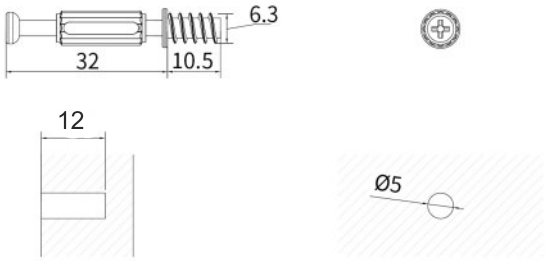

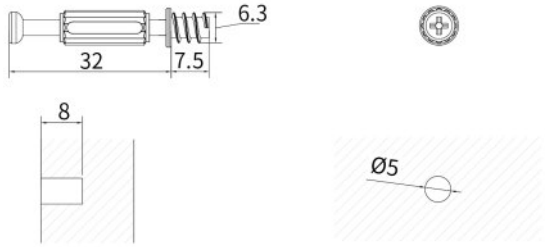

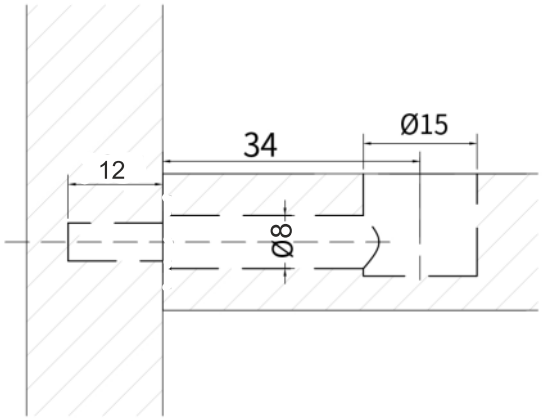

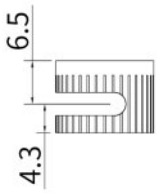

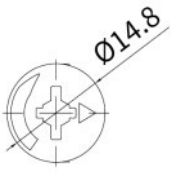



Jinio J6-15 Эксцентрик D15 мм
RU 01504
= 10 уп. по 1000 шт.



Jinio J6-15 Шток эксцентрика евровинт L10,5 мм
RU 04301
= 5 уп. по 1000 шт.

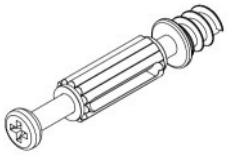

Jinio J6-15 Шток эксцентрика евровинт L7,5 мм
RU 04001
= 5 уп. по 1000 шт.

Материал: Промышленный пластик, углеродистая сталь с цинковым покрытием

Предназначен : Бетон, кирпич, пористый кирпич, пенобетон, гипсокартон и т.д.



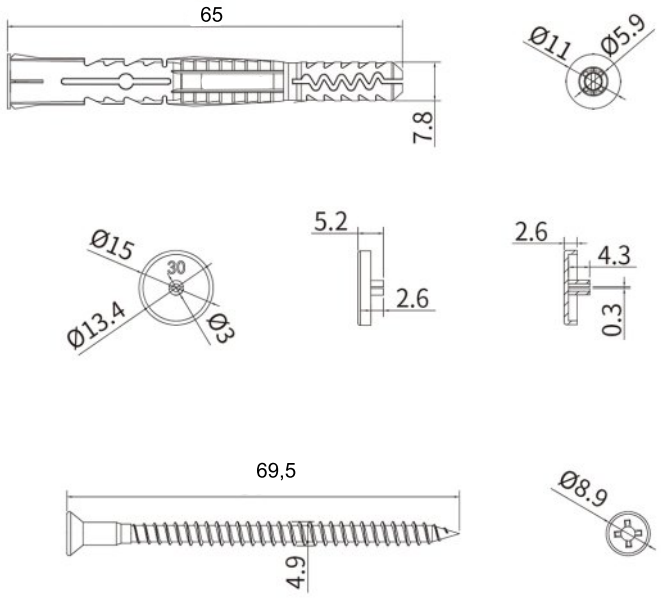

Арт. P8-65 (к-т)
4 шт

ВНИМАНИЕ: ***продается только комплектом.***

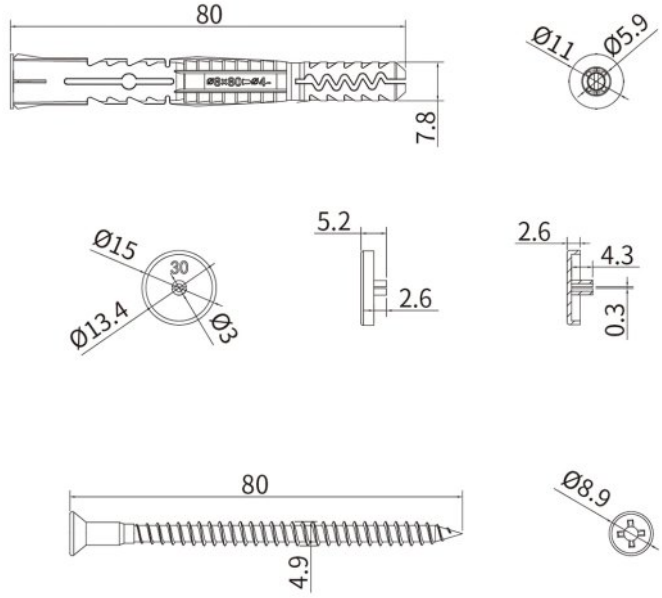

Арт. P8-80 (к-т)
4 шт

ВНИМАНИЕ: ***продается только комплектом.***

Схема установки





Эксцентрик в пластиковом корпусе J8G

Арт. J8G (к-т)

Запатентованная продукция, подделка НЕ ДОПУСКАЕТСЯ



Материал: Сталь с гальваническим покрытием, пластик

Диаметр видимого отверстия 5 мм

Предназначен для плит: от 16 мм и более

Сертификат испытаний SGS (Швейцария)

Схема установки

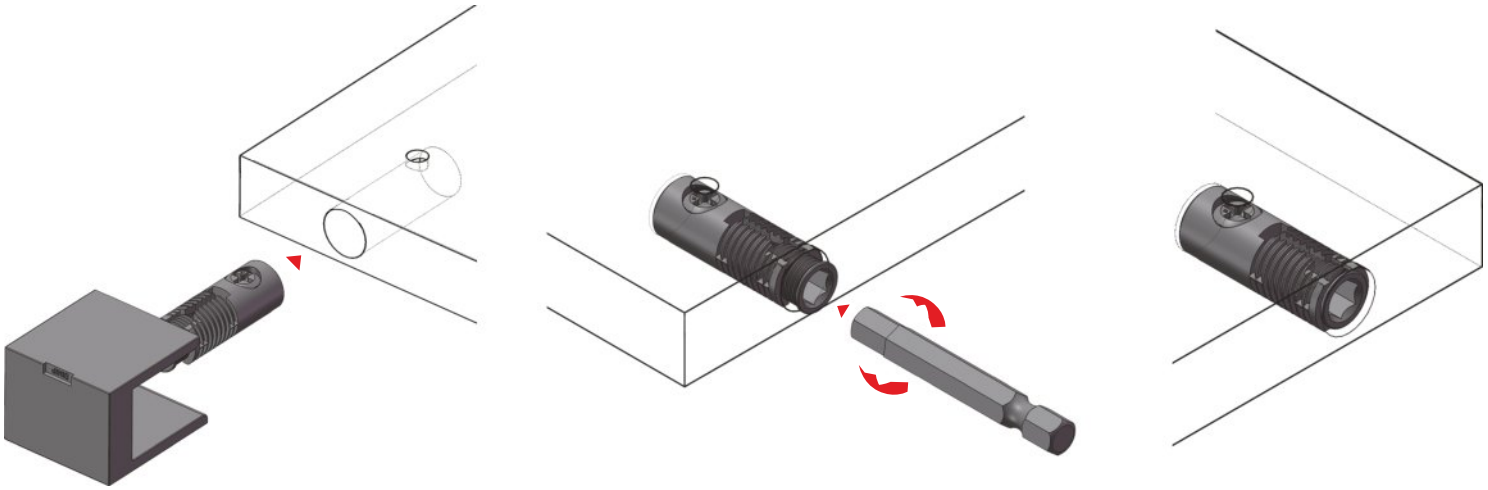

ВНИМАНИЕ: ***Продаётся только комплектом***

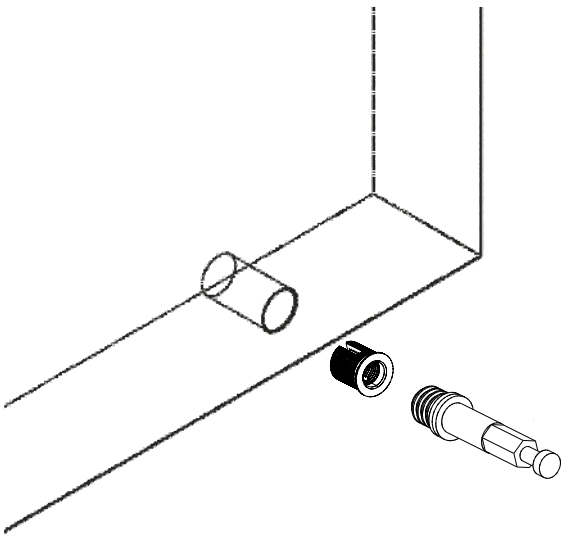

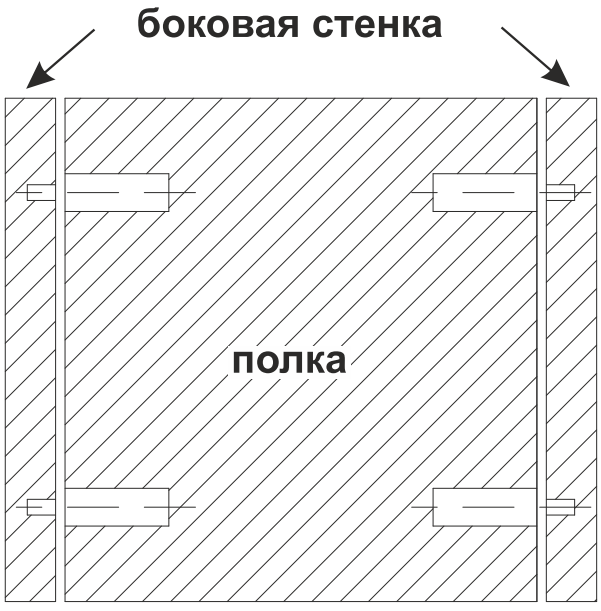

精诺 JINIO

ТАРГЕТ

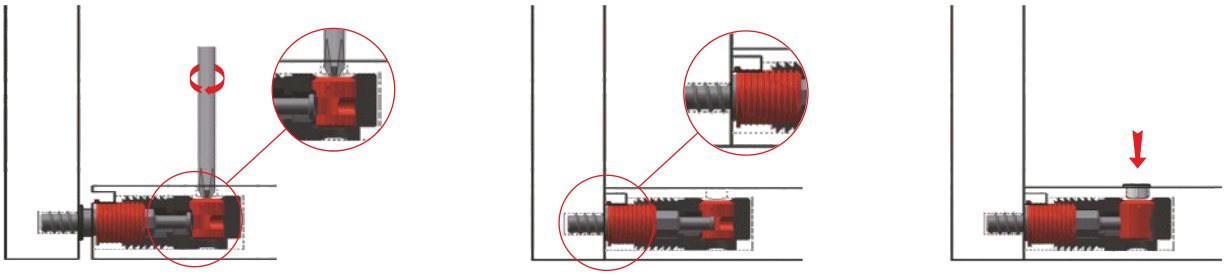

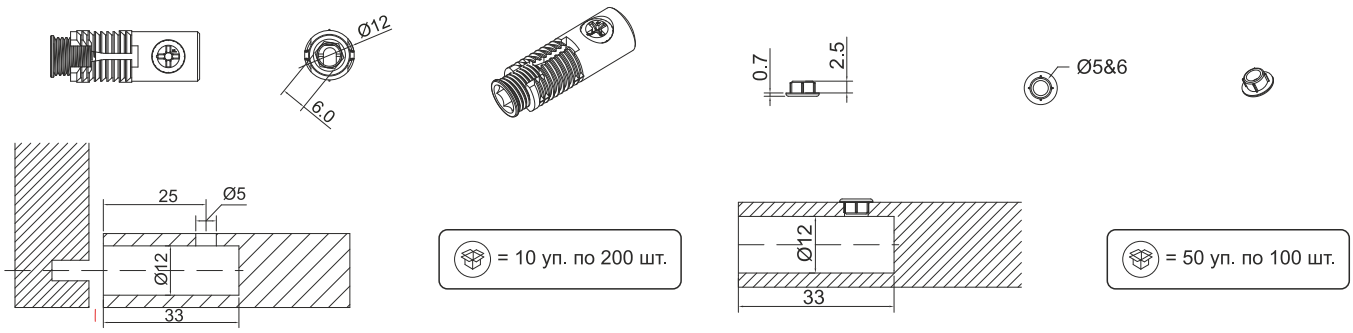
Ø12
6.0
0.7
2.5
Ø5&6
25
Ø5
Ø12
33
= 10 уп. по 200 шт.
Ø12
33
= 50 уп. по 100 шт.

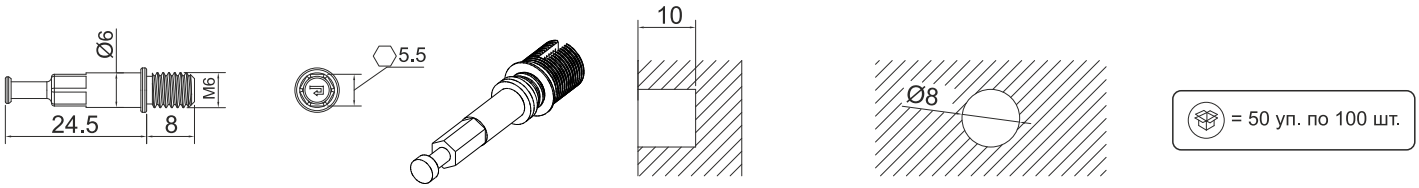
Ø6
M6
24.5
8
5.5
10
Ø8
= 50 уп. по 100 шт.

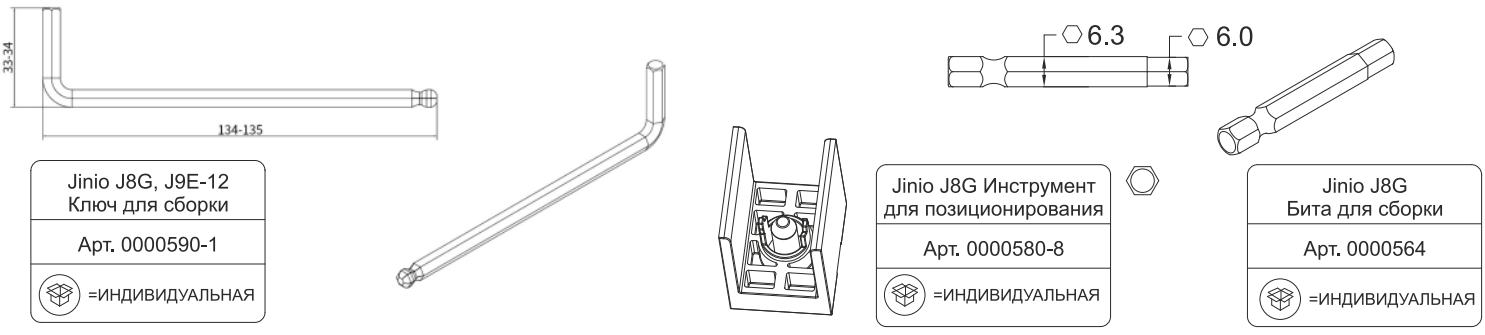
33.34
134-135
Jinio J8G, J9E-12
Ключ для сборки
Арт. 0000590-1
=ИНДИВИДУАЛЬНАЯ
6.3
6.0
Jinio J8G Инструмент
для позиционирования
Арт. 0000580-8
=ИНДИВИДУАЛЬНАЯ
Jinio J8G
Бита для сборки
Арт. 0000564
=ИНДИВИДУАЛЬНАЯ

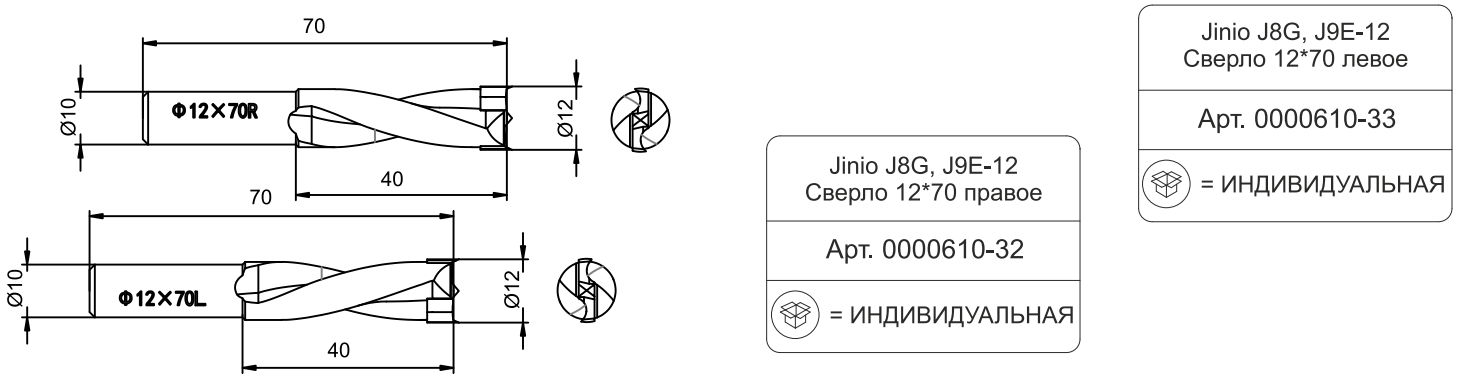
70
Ø10
Φ12×70R
Ø12
40
70
Ø10
Φ12×70L
Ø12
40
Jinio J8G, J9E-12
Сверло 12*70 правое
Арт. 0000610-32
= ИНДИВИДУАЛЬНАЯ
Jinio J8G, J9E-12
Сверло 12*70 левое
Арт. 0000610-33
= ИНДИВИДУАЛЬНАЯ

Полкодержатель с фиксацией J9-8

Запатентованная продукция, подделка НЕ ДОПУСКАЕТСЯ

Материал: Экологически чистый цинковый сплав, пластик

Диаметр сверления: 8 мм

Нагрузка: до 200 кг на полку

Предназначен для плит: от 14 мм и более

Регулировка: ±1 мм

Сертификат испытаний SGS (Швейцария)



Схема установки

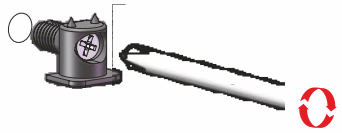

Регулировка влево и вправо осуществляется за счёт овального отверстия

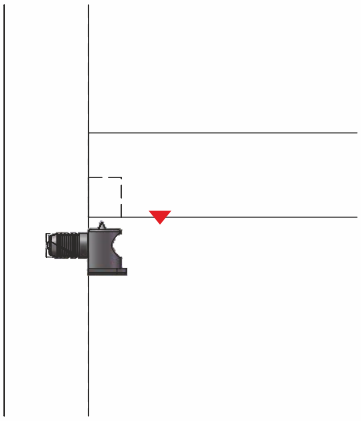

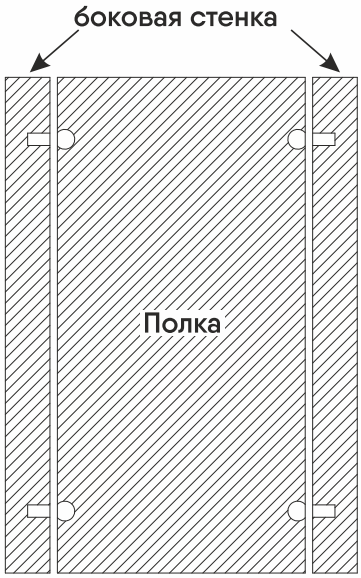



Зафиксировано

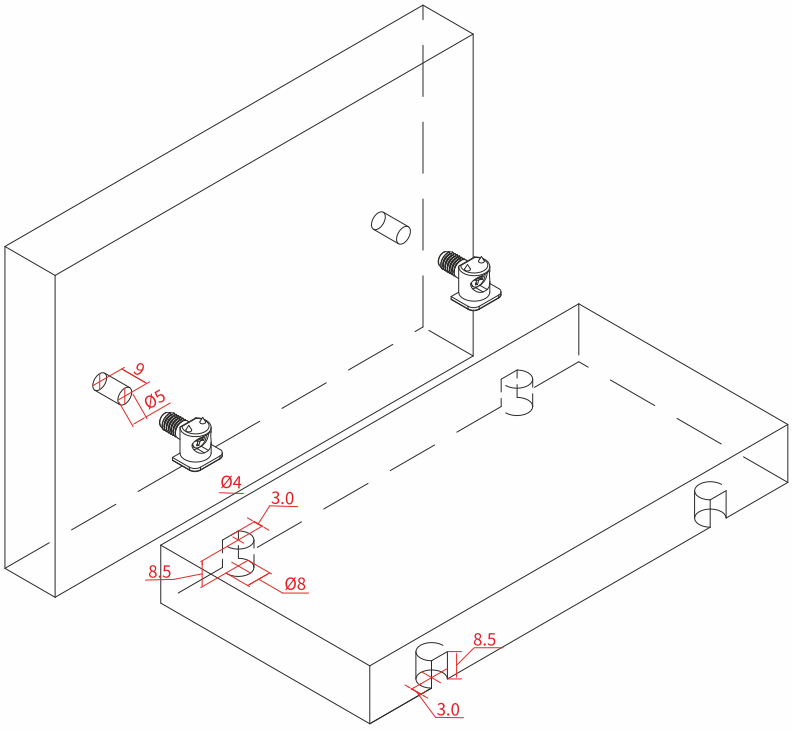

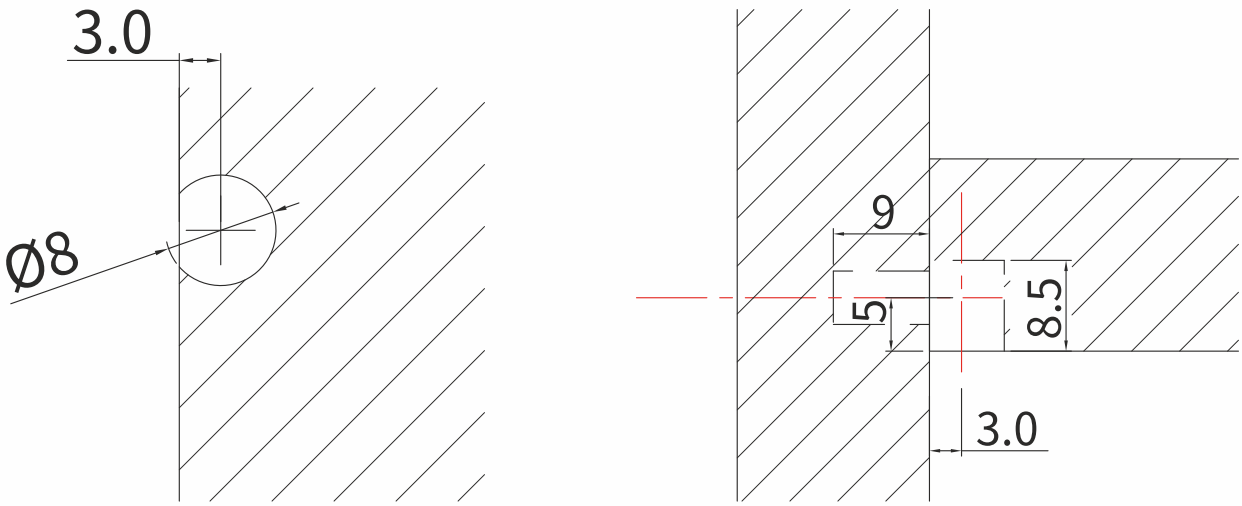

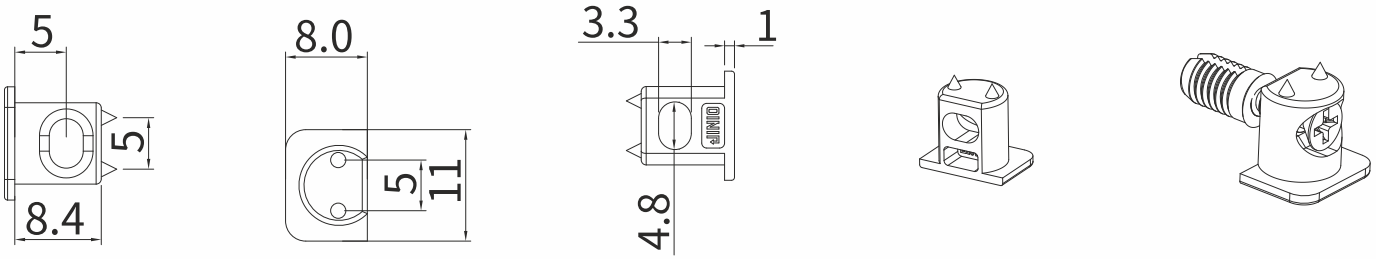

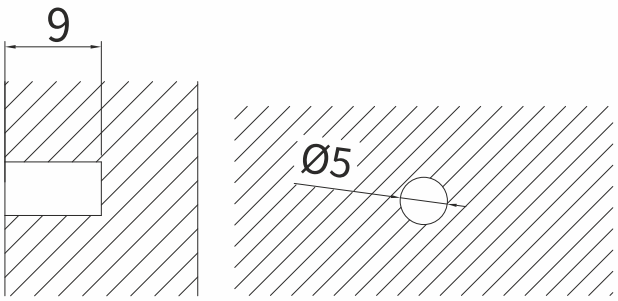

Jinio J9-8 полкодержатель с квадратным основанием черный никель	Jinio J9-8 полкодержатель с квадратным основанием никель
9000881A	9000882A
= 50 уп. по 100 шт.	= 50 уп. по 100 шт.

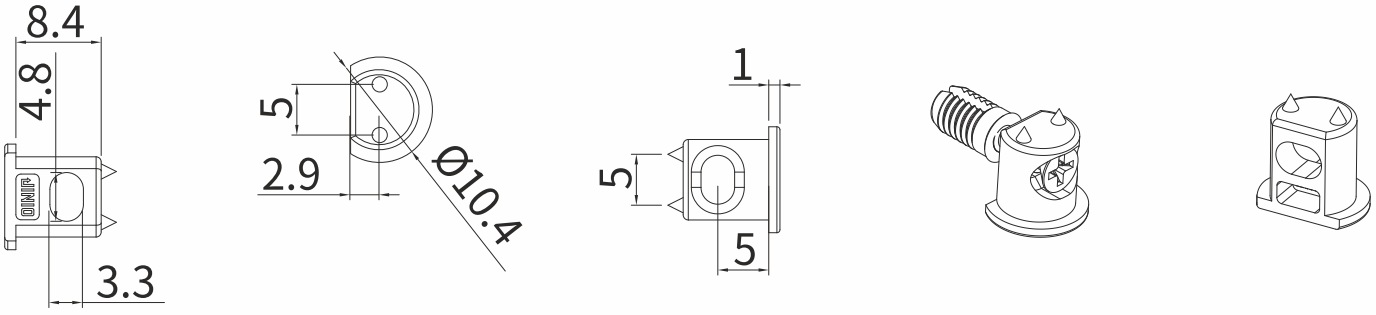

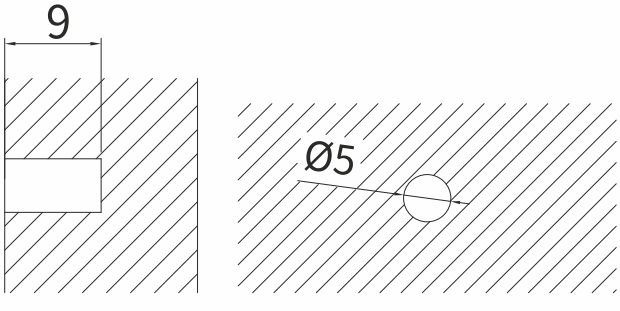

Jinio J9-8 полкодержатель с круглым основанием черный никель	Jinio J9-8 полкодержатель с круглым основанием никель
9000881B	9000882B
= 50 уп. по 100 шт.	= 50 уп. по 100 шт.

Эксцентрик в пластиковом корпусе J9E-12

Запатентованная продукция, подделка НЕ ДОПУСКАЕТСЯ

Материал: Экологически чистый цинковый сплав, пластик, сталь с гальваническим покрытием

Диаметр сверления: 12 мм

Нагрузка: до 200 кг на полку

Предназначен для плит: от 14 мм и более

Сертификат испытаний SGS (Швейцария)



Схема установки

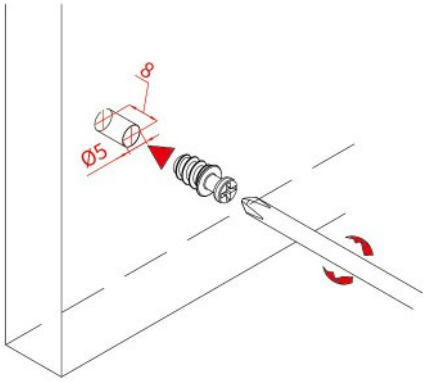

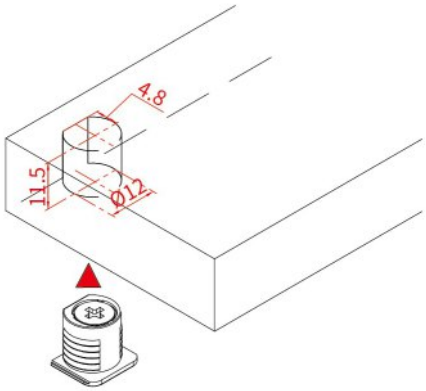

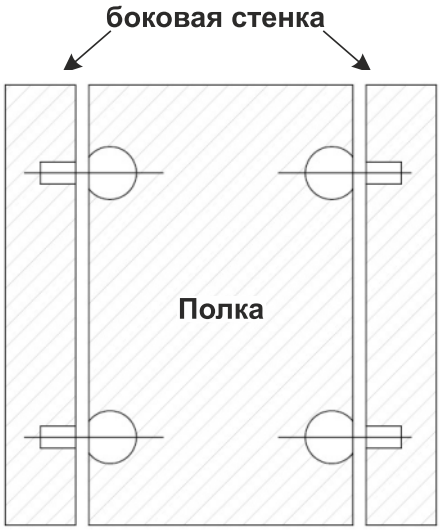

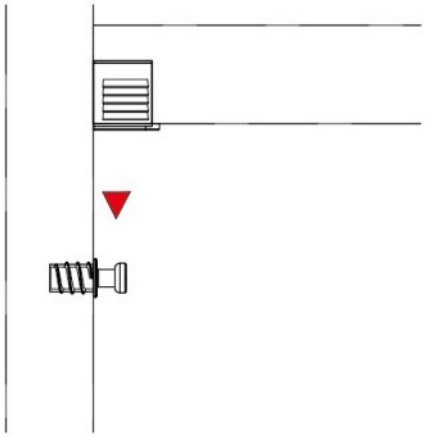

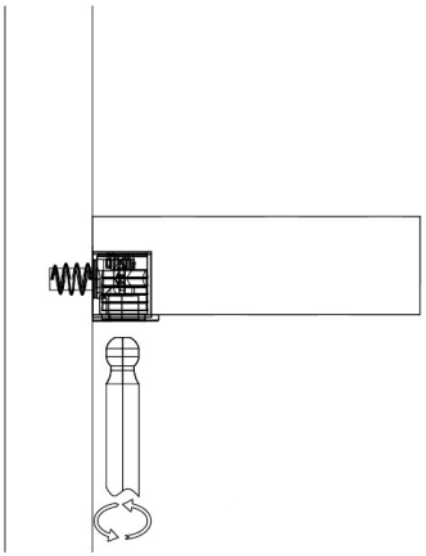

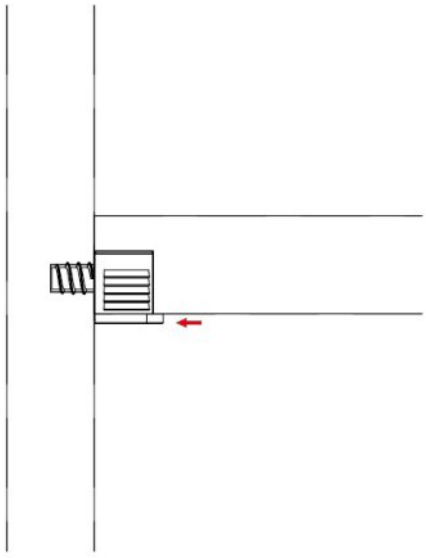

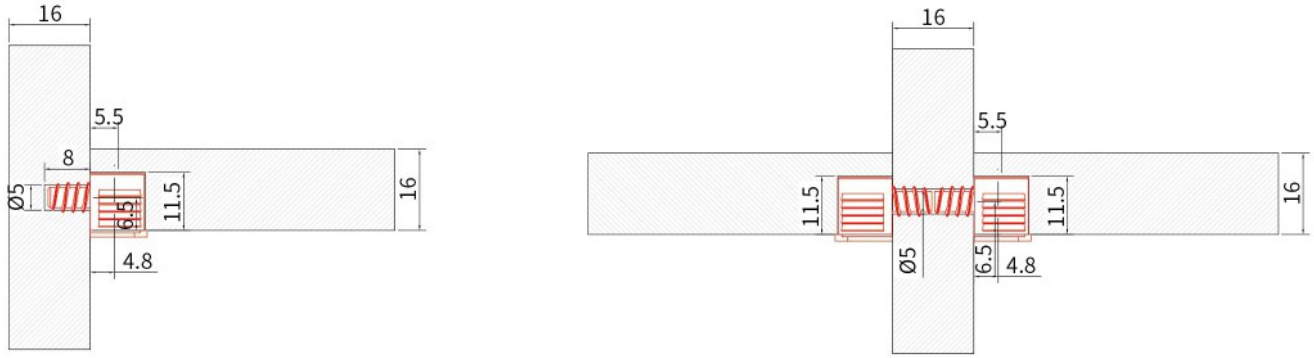

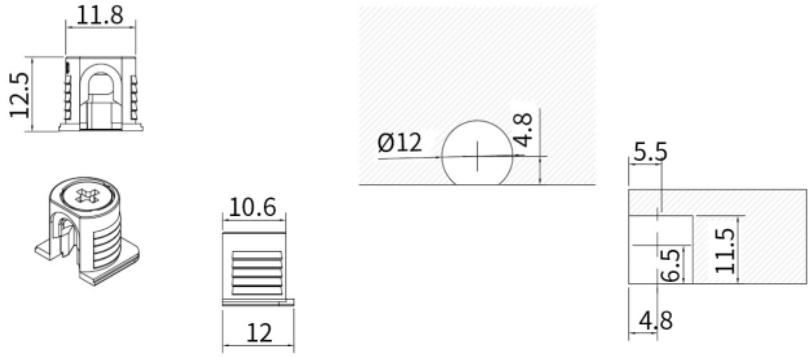

Jinio J9E-12 Эксцентрик в пластиковом корпусе D12 мм
9000900E
= 50 уп. по 1000 шт.

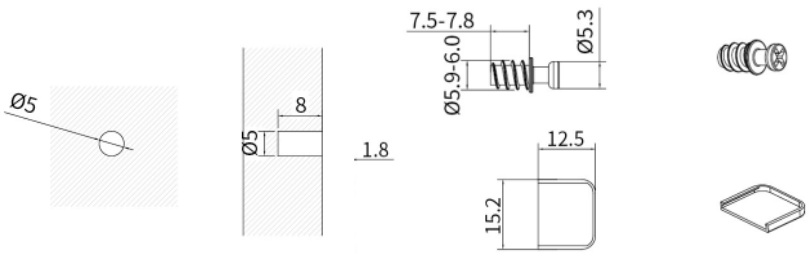

Jinio J9E-12 Шток эксцентрика евровинт
0000041
= 50 уп. по 1000 шт.

Jinio J9E-12 Заглушка эксцентрика
Арт. 9001501-1112 A B D E
= 50 уп. по 100 шт.

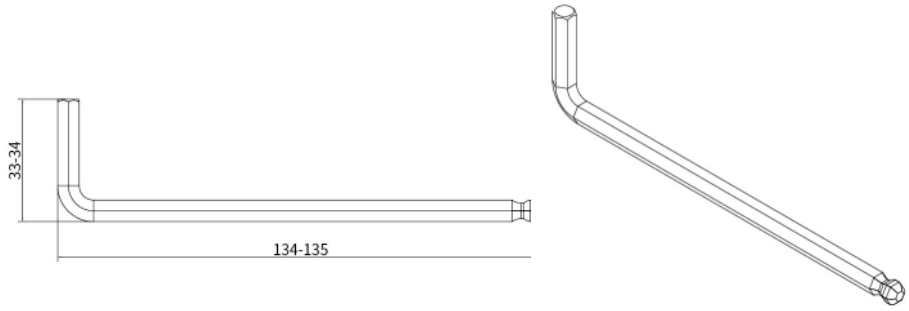

Jinio J8G, J9E-12 Ключ для сборки
Арт. 0000590-1
= ИНДИВИДУАЛЬНАЯ

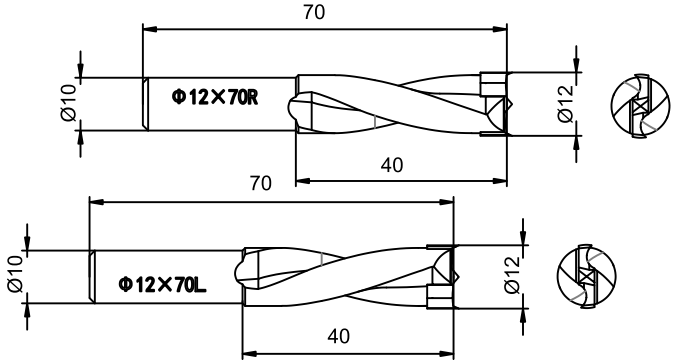

Jinio J8G, J9E-12 Сверло 12*70 правое
Арт. 0000610-32
= ИНДИВИДУАЛЬНАЯ

Jinio J8G, J9E-12 Сверло 12*70 левое
Арт. 0000610-33
= ИНДИВИДУАЛЬНАЯ

Запатентованная продукция, подделка НЕ ДОПУСКАЕТСЯ

Материал: Пластик, сталь с гальваническим покрытием

Диаметр фрезерования боковой стенки: 12 мм

Нагрузка: до 200 кг на полку

Предназначен для плит: от 16 мм и более

Сертификат испытаний SGS (Швейцария)



Схема установки



Ответная часть устанавливается на боковую стенку

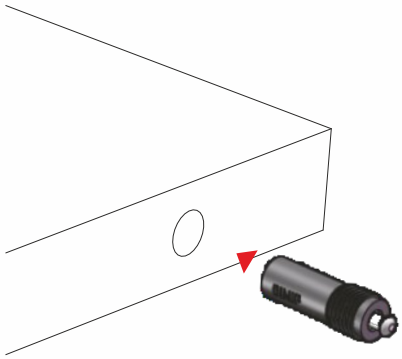

Телескопический шток устанавливается в отверстие в полке

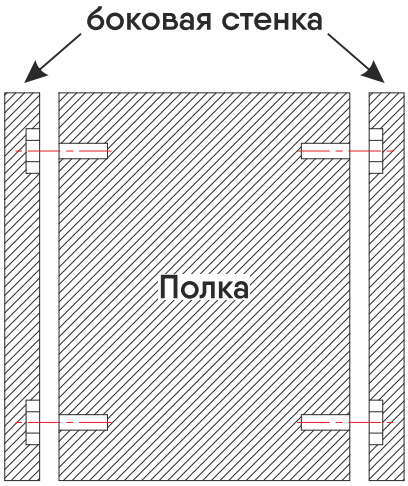

Процесс установки

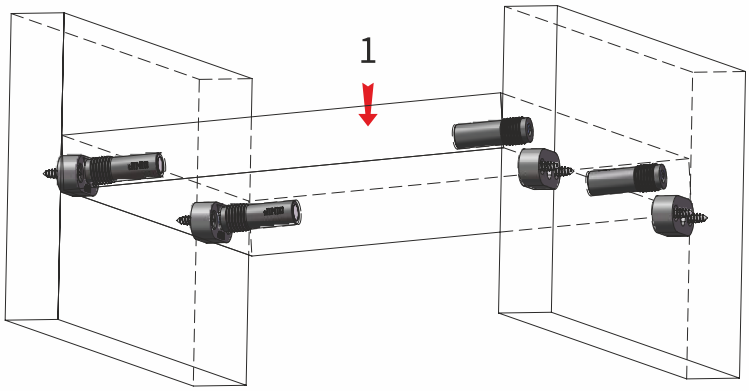

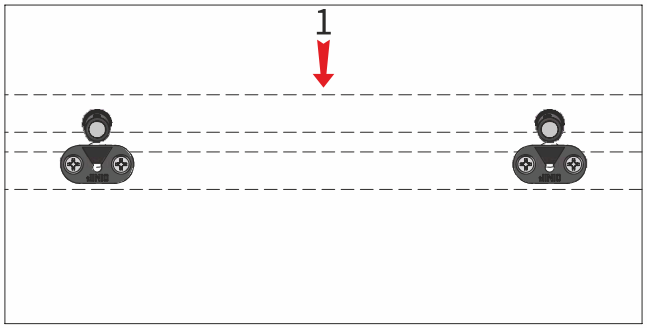

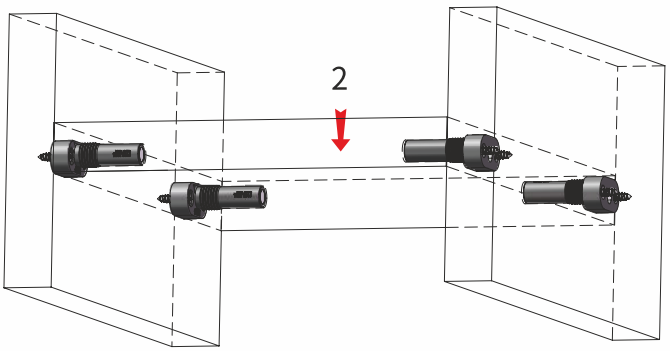

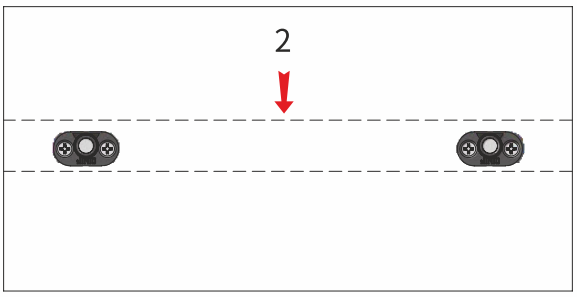

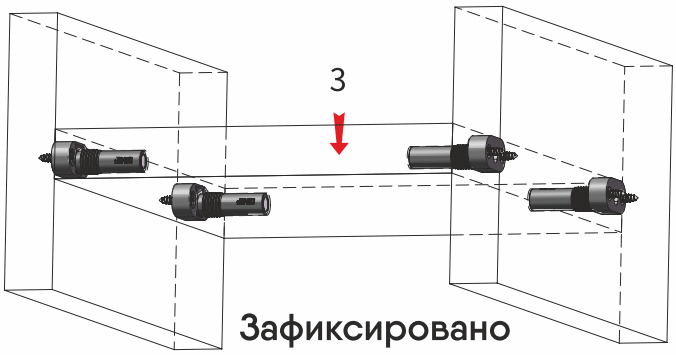

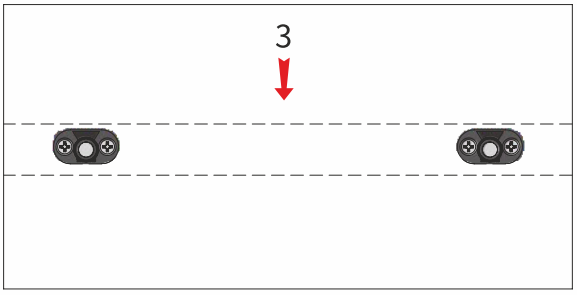

ВНИМАНИЕ: ***Продаётся только комплектом***

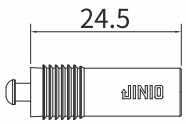

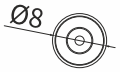



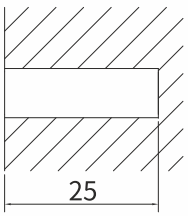

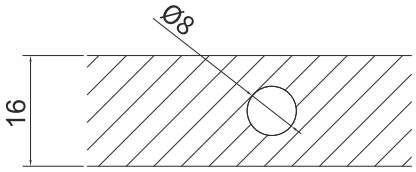

= 50 уп. по 100 шт.

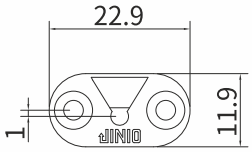

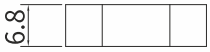

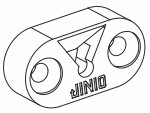

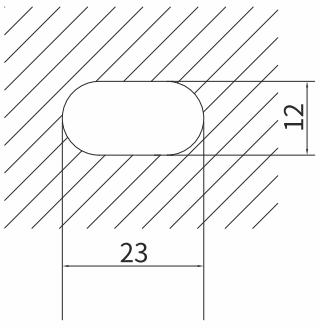

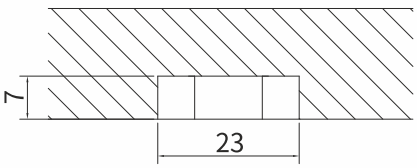

= 50 уп. по 100 шт.

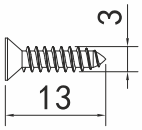





= 50 уп. по 200 шт.

Запатентованная продукция, подделка НЕ ДОПУСКАЕТСЯ

Материал: Экологически чистый цинковый сплав, сталь с гальваническим покрытием, пластик

Диаметр сверления: 6 мм

Предназначен для плит: от 16 мм и более

Сертификат испытаний SGS (Швейцария)



Схема установки

Сверление: сверло 6,5x30+12x70

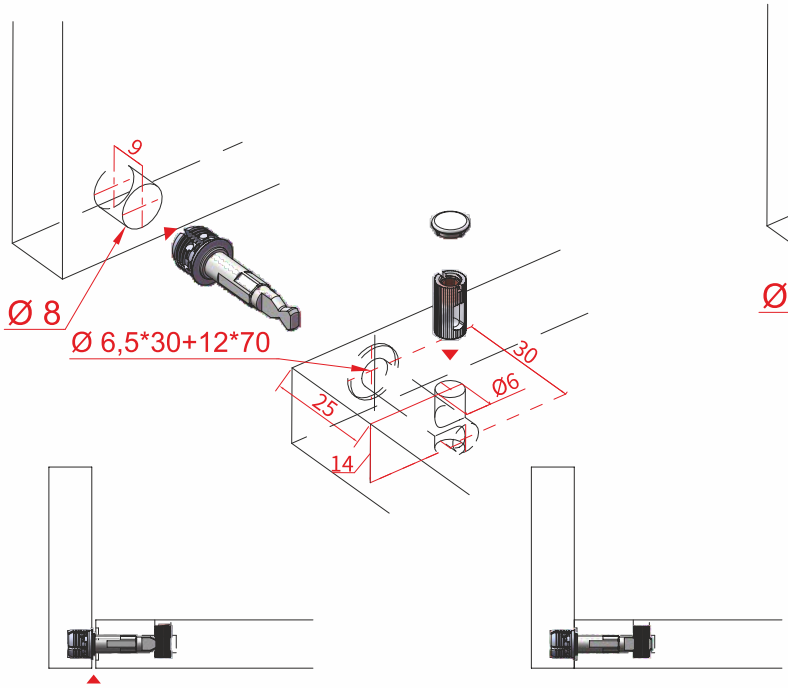

Сверление: глухое сверло 8x70

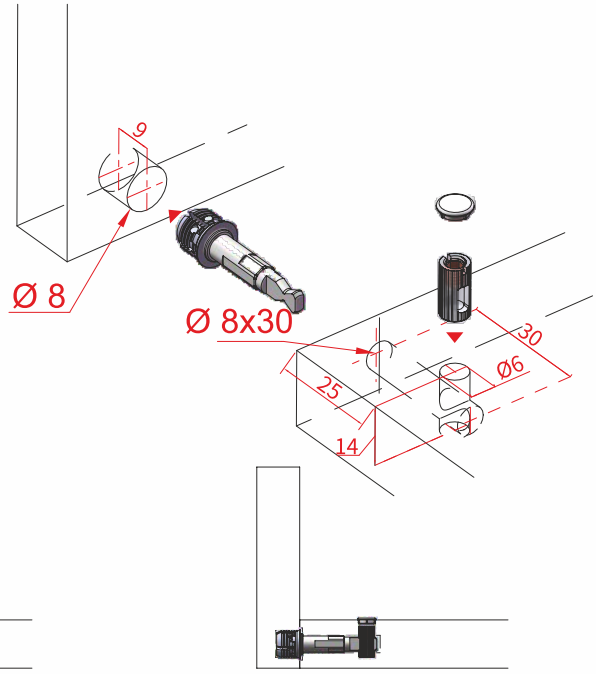

ВНИМАНИЕ: ***Продаётся только комплектом***

Сверление: сверло 6,5x30+12x70

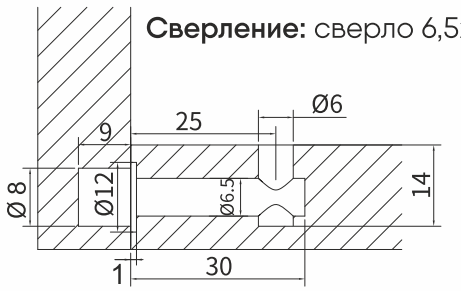

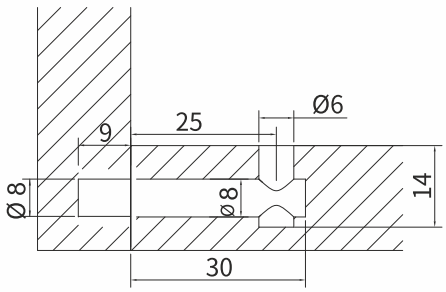

Сверление: глухое сверло 8x70

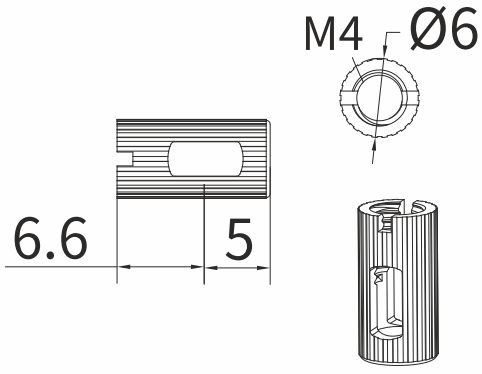

= 20 уп. по 100 шт.

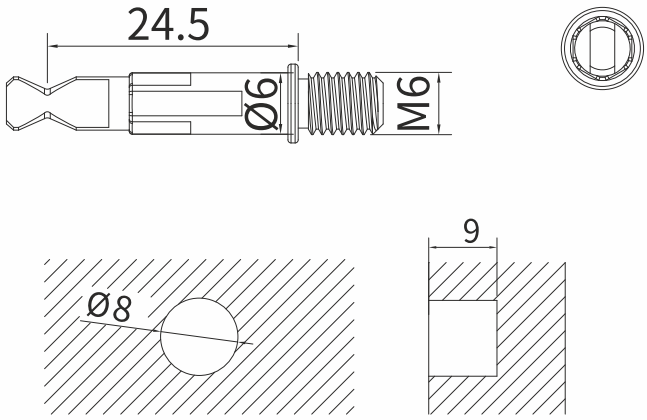

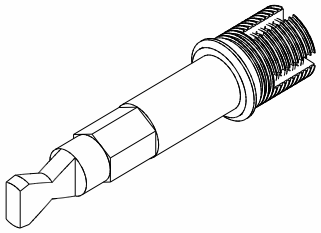

= 20 уп. по 100 шт.

= 20 уп. по 100 шт.

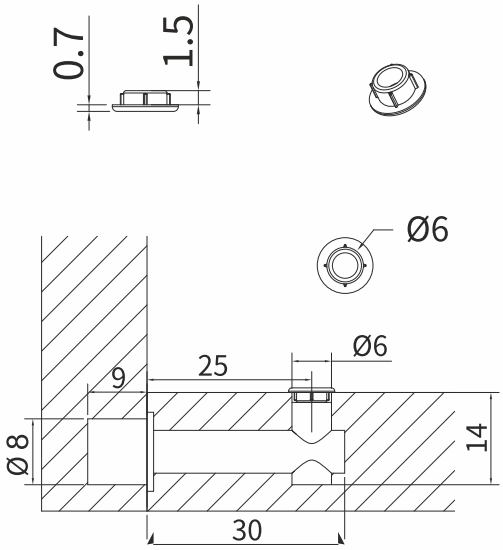

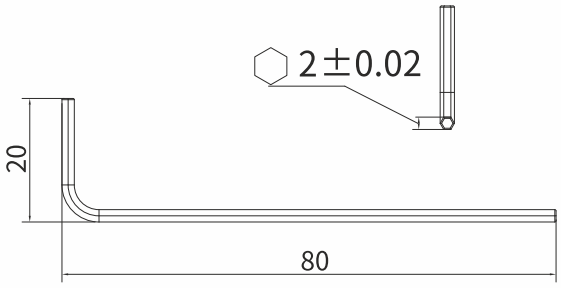

Jinio J11
Ключ шестигранный 2*20*80 мм
Арт. 0000590
=ИНДИВИДУАЛЬНАЯ

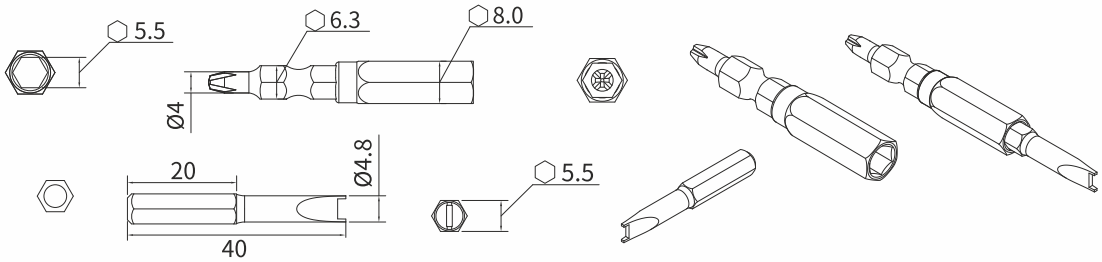

Jinio J11
Бита для сборки
Арт. 0000561
= ИНДИВИДУАЛЬНАЯ

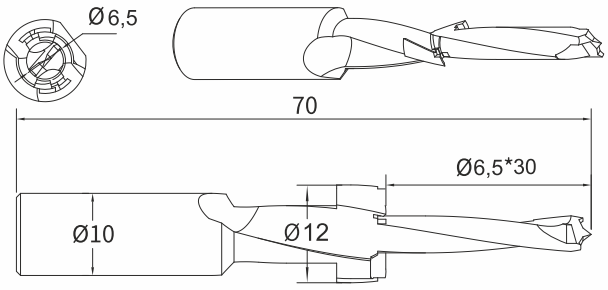

Jinio J11
Сверло 6,5*30+12*70 правое
Арт. 0000610-09
= ИНДИВИДУАЛЬНАЯ

Jinio J11
Сверло 6,5*30+12*70 левое
Арт. 0000610-10
= ИНДИВИДУАЛЬНАЯ

N1 Система отталкивания ящиков

Запатентованная продукция, подделка НЕ ДОПУСКАЕТСЯ



Основной материал: промышленный пластик

Регулировка: 6мм

Минимальный зазор: 3мм

Сертификат испытаний SGS (Швейцария)

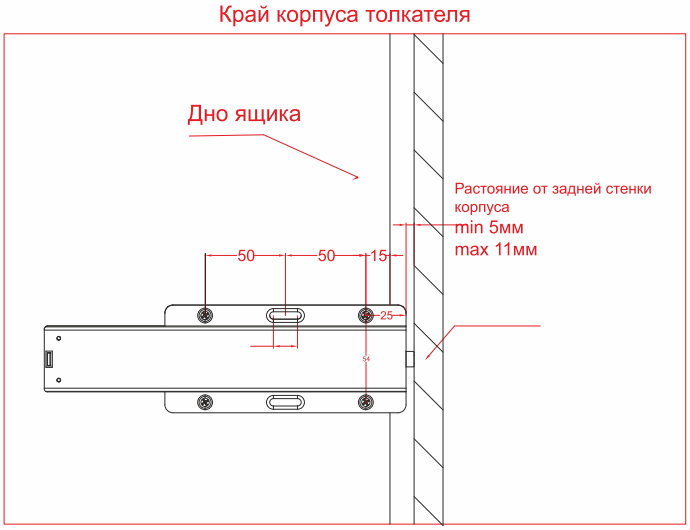

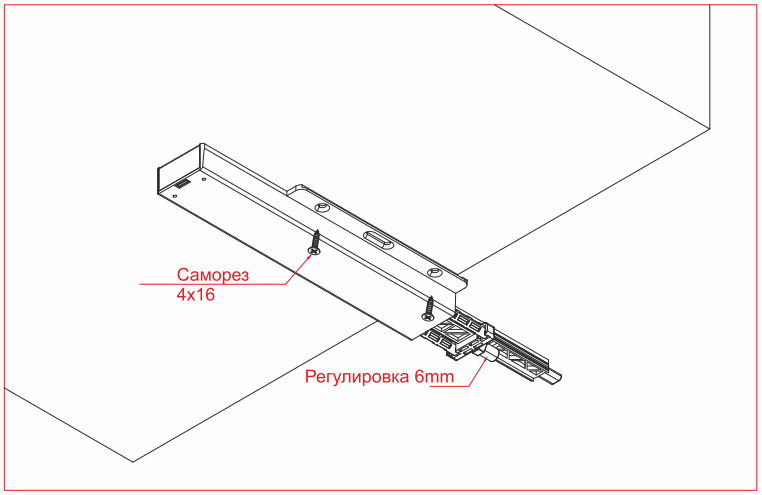

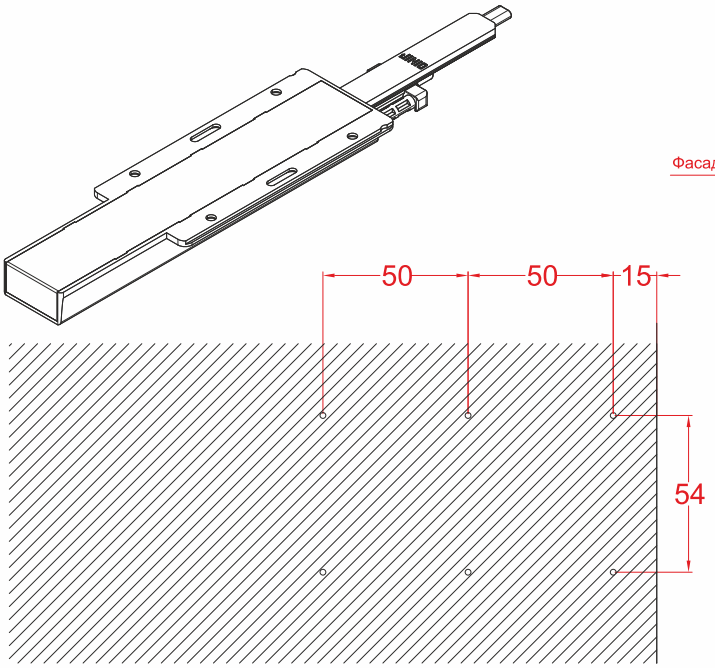

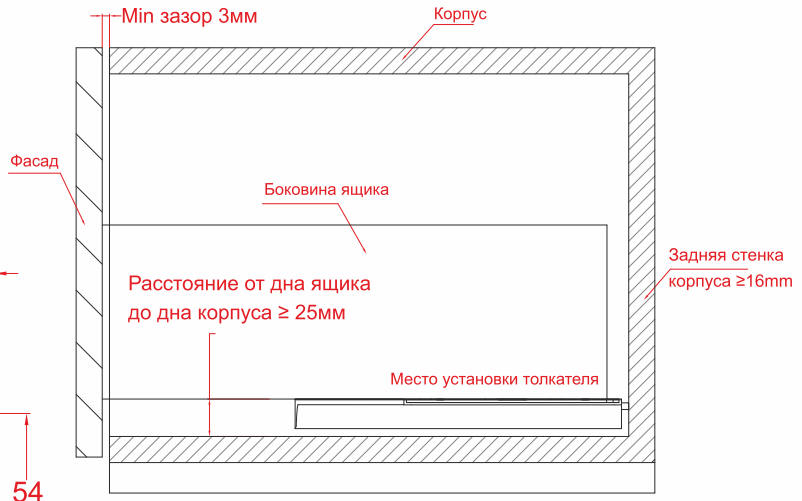

Jinio Система отталкивания ящиков
Арт.8010001
= ИНДИВИДУАЛЬНАЯ

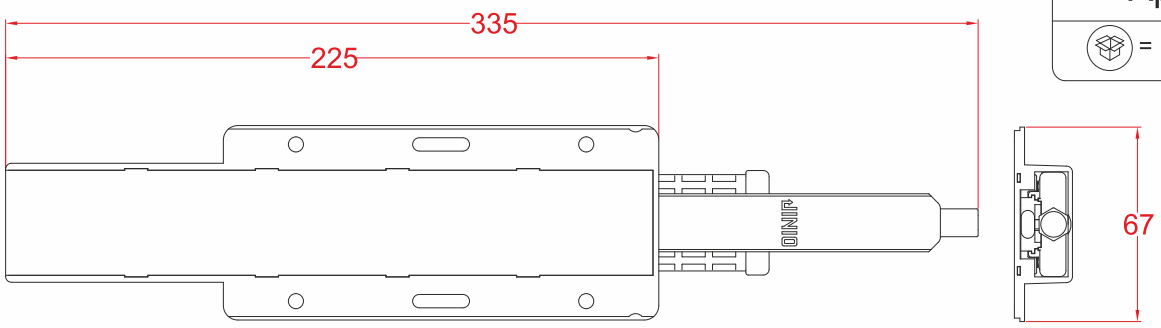

精诺 JINIO

ТАРГЕТ

N2 Толкатель для распашных фасадов с плавным открыванием

Запатентованная продукция, подделка НЕ ДОПУСКАЕТСЯ



Основной материал: промышленный пластик
Регулировка: 6мм
Минимальный зазор: 1,8мм
Установка: Врезной / Накладной
Усиление: 40N

Сертификат испытаний SGS (Швейцария)

Схема установки

Накладной

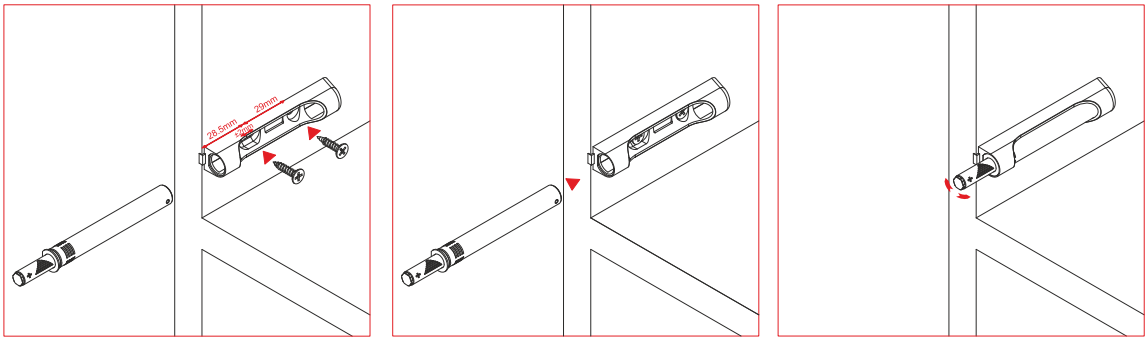

Врезной

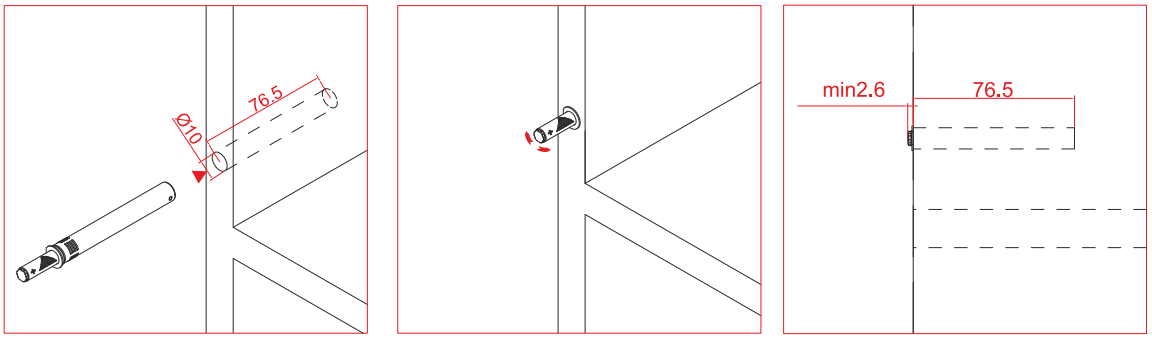



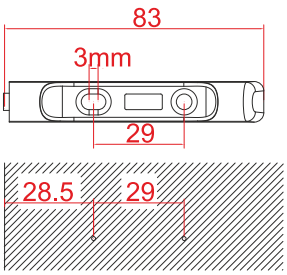

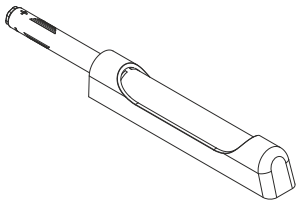

Jinio Толкатель с плавным открыванием
Арт. 1010200
= ИНДИВИДУАЛЬНАЯ



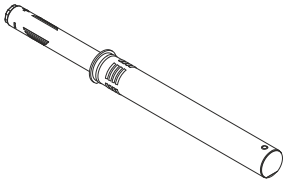

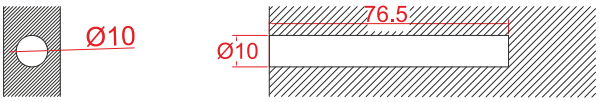

Основной материал: холоднокатаная сталь

Динамическая нагрузка: 35 кг.

Толщина металла: 1,2x1x1 мм

Покрытие: черное (гальваника)
белое (краска)

Сертификат испытаний SGS (Швейцария)



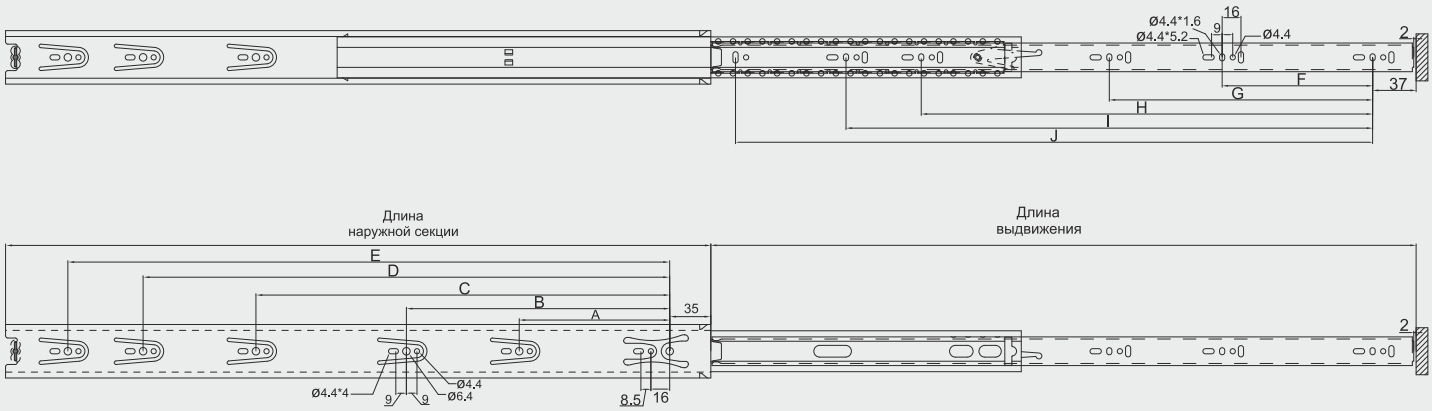

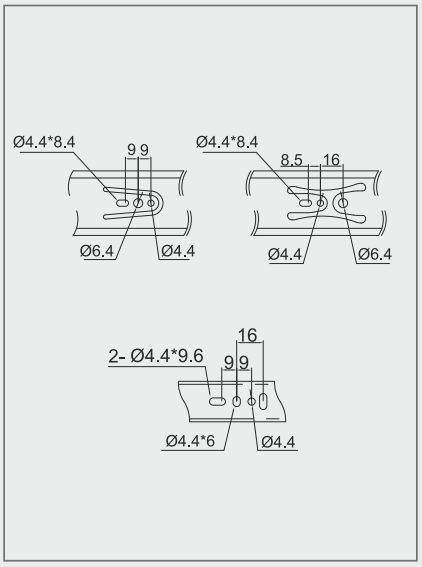

Размер(мм)	Длина наружной секции	A	B	C	D	E	F	G	H	I	J	Длина выдвижения
200 мм	200	96									142	194
250 мм	250	128									192	250
300 мм	300	128	224				128				242	300
350 мм	350	128	224				128				292	350
400 мм	400	128	224	320			128				342	400
450 мм	450	128	224	352			128	320			392	450
500 мм	500	128	224	352	416		128	192	352		442	500
550 мм	550	128	224	352	448		128	224	416		492	550
600 мм	600	128	224	352	448	512	128	224	416		542	600



Схема установки

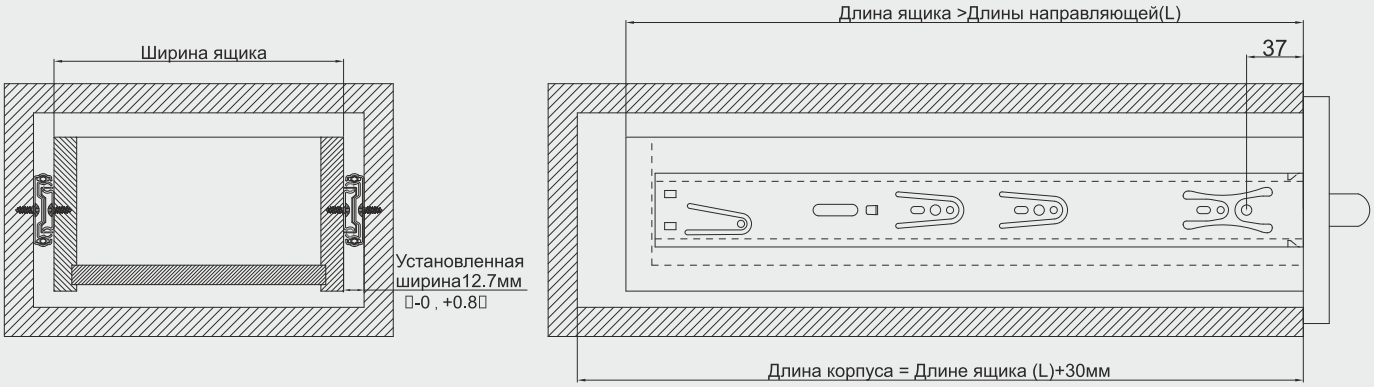

Материал	Арт. (черн/бел)	Тип продукта		Внутр-я глубина корпуса (мин)	Длина ящика (мин)	Номинальная длина
Холоднокатаная сталь	7408011/8408011-200	направляющая шариковая, 200 мм	Установочная ширина 13.5 мм	204 мм	200 мм	200 мм
	7410011/8410011-250	направляющая шариковая, 250 мм		254 мм	250 мм	250 мм
	7412011/8412011-300	направляющая шариковая,300 мм		304 мм	300 мм	300 мм
	7414011/8414011-350	направляющая шариковая, 350 мм		354 мм	350 мм	350 мм
	7416011/8416011-400	направляющая шариковая, 400 мм		404 мм	400 мм	400 мм
	7418011/8418011-450	направляющая шариковая, 450 мм		454 мм	450 мм	450 мм
	7420011/8420011-500	направляющая шариковая, 500 мм		504 мм	500 мм	500 мм
	7422011/8422011-550	направляющая шариковая, 550 мм		554 мм	550 мм	550 мм
	7424011/8424011-600	направляющая шариковая, 600 мм		604 мм	600 мм	600 мм

упаковка 10 комп.

Направляющие шариковые полного выдвижения с доводчиком

Основной материал: холоднокатаная сталь

Динамическая нагрузка: 35 кг.

Толщина металла: 1,2x1x1 мм

Покрытие: черное (гальваника)
белое (краска)

Тип закрывания: Плавное

Сертификат испытаний SGS (Швейцария)



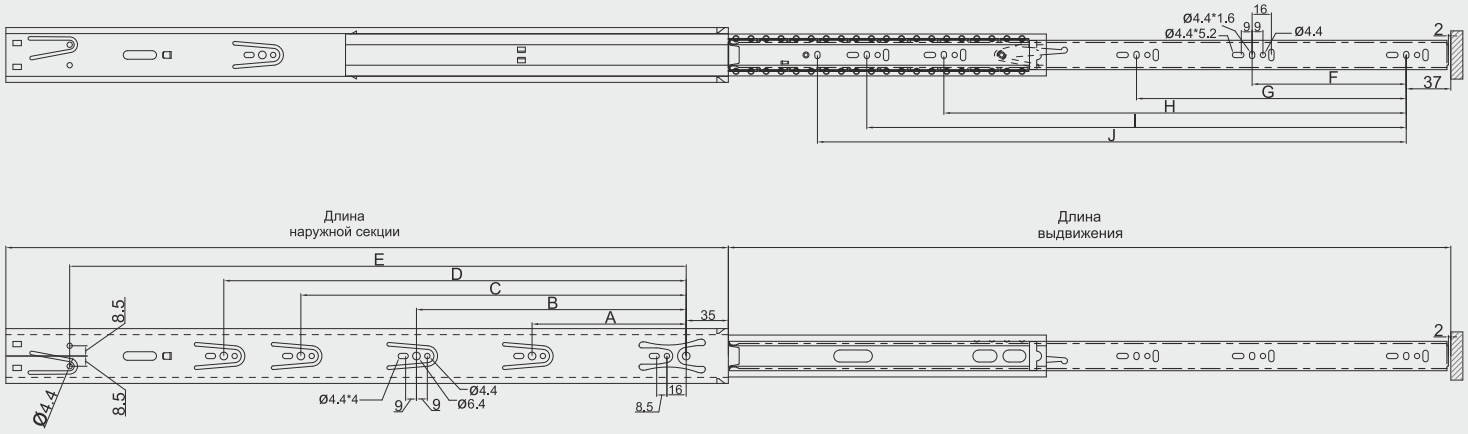

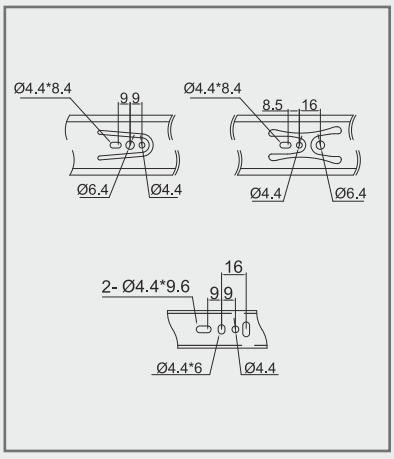

Размер(мм)	Длина наружной секции	A	B	C	D	E	F	G	H	I	J	Длина выдвижения
250	250					162					119	168
300	300	96				212					169	246
350	350	128				262	128				219	346
400	400	128	192			312	128				269	400
450	450	128	224			362	128	224			319	450
500	500	128	288			412	128	224			369	500
550	550	128	256	352		462	128	256			419	550
600	600	128	256	384		512	128	256			469	600



Схема установки

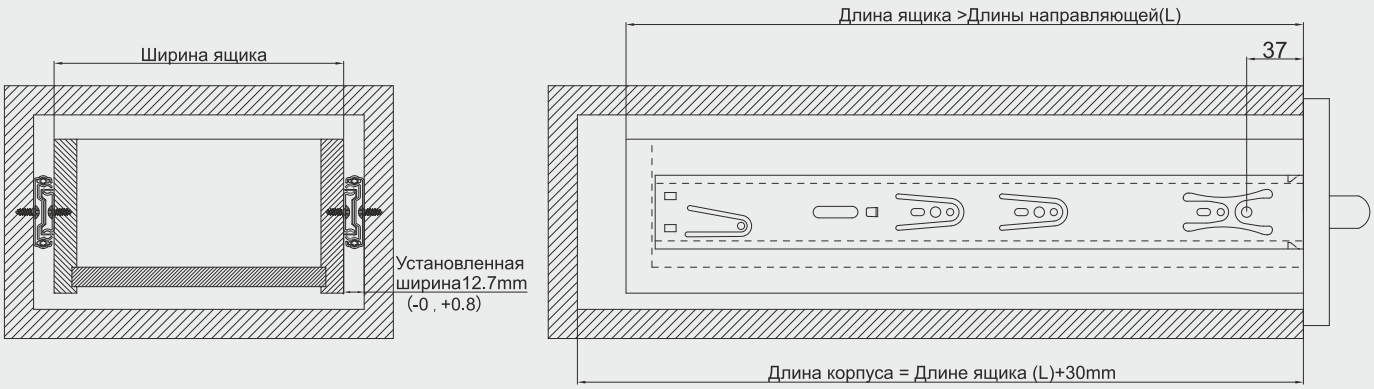

Материал	Арт. (черн/бел)	Тип продукта		Внутр-я глубина корпуса (мин)	Длина ящика (мин)	Номинальная длина
Холоднокатаная сталь	7410012/8410012-250	направляющая шариковая, 250мм	Установочная ширина 13.5 мм	254 мм	250 мм	250 мм
	7412012/8412012-300	направляющая шариковая, 300мм		304 мм	300 мм	300 мм
	7414012/8414012-350	направляющая шариковая, 350мм		354 мм	350 мм	350 мм
	7416012/8416012-400	направляющая шариковая, 400мм		404 мм	400 мм	400 мм
	7418012/8418012-450	направляющая шариковая, 450мм		454 мм	450 мм	450 мм
	7420012/8420012-500	направляющая шариковая, 500мм		504 мм	500 мм	500 мм
	7422012/8422012-550	направляющая шариковая, 550мм		554 мм	550 мм	550 мм
	7424012/8424012-600	направляющая шариковая, 600мм		604 мм	600 мм	600 мм

упаковка 10 комп.

Направляющие скрытого монтажа полного выдвижения с доводчиком

Материал: оцинкованная сталь, пластик

Динамическая нагрузка: 35 кг.

Толщина металла: 1,8/1,5/1 мм

Полное выдвижение, синхронизация по всей длине

Модельный ряд: 250-550

Сертификат испытаний SGS (Швейцария)



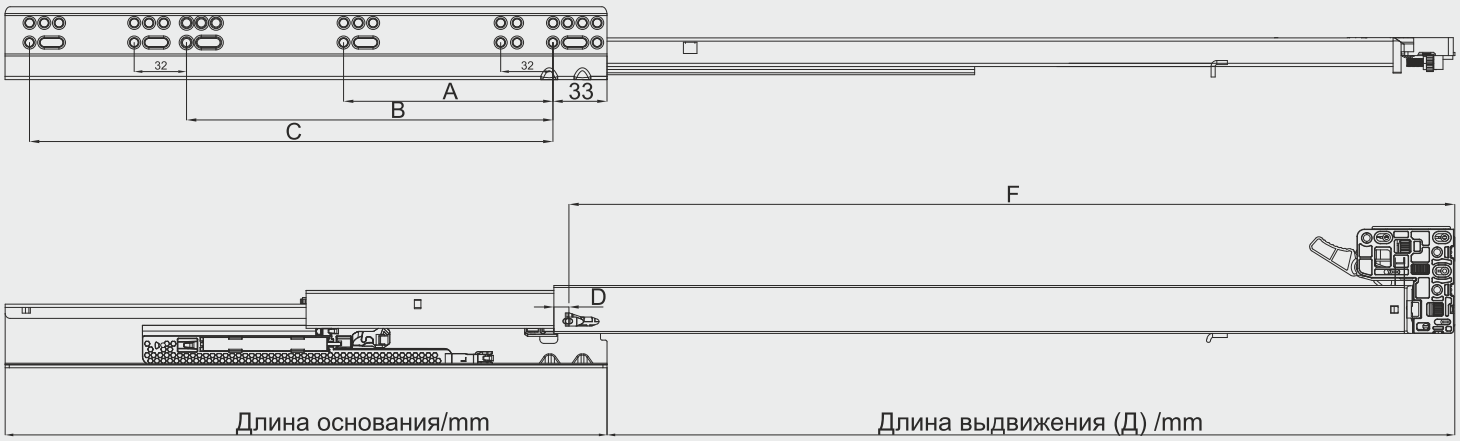

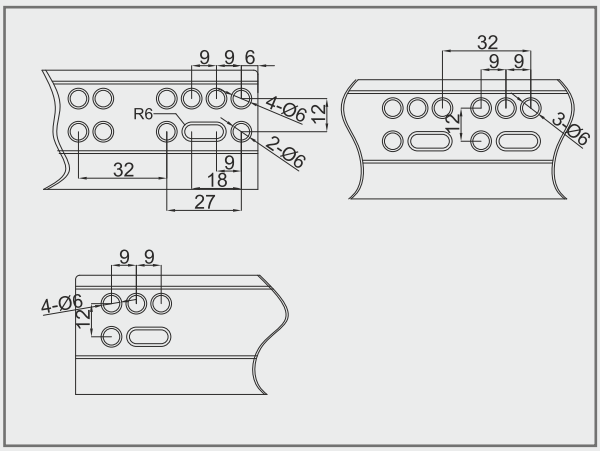

Размер	Длина основания	A	B	C	D	F	L
250	240	128		192	10	240	218
300	265	128		224	10	290	268
350	265	128		224	10	340	318
400	285	128		224	10	390	368
450	300	128	224	256	10	440	418
500	360	128	224	320	10	490	468
550	368	128	224	320	10	490	518

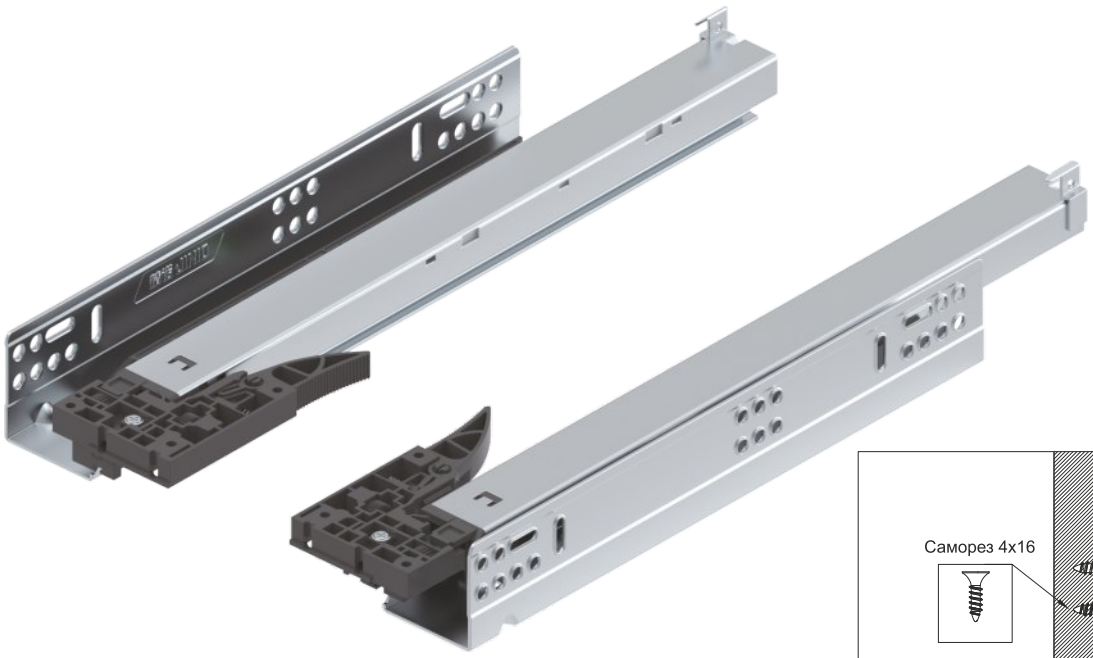

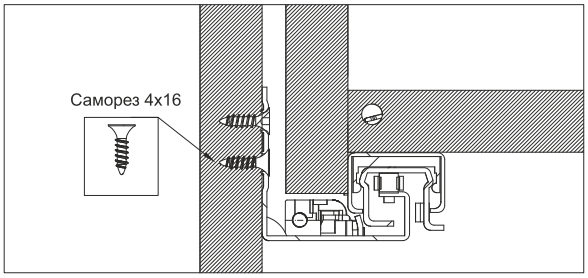

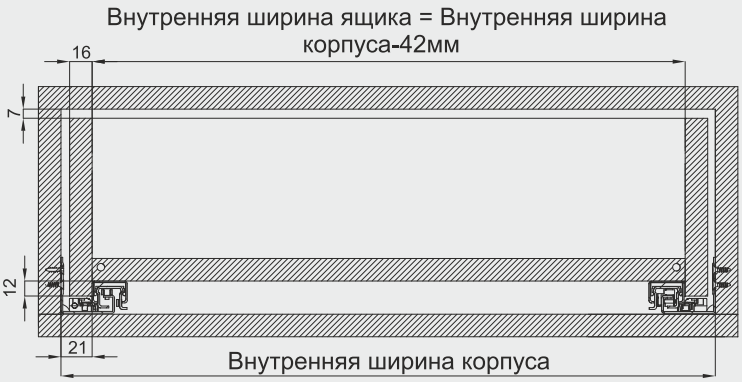

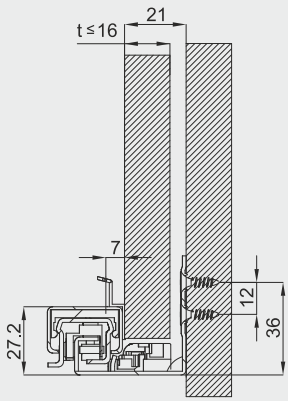



Размер	Арт.	Min глубина корпуса мм	Глубина ящика мм	Номинальная длина направляющих мм
250	3810312A	258	240	250
300	3812312A	308	290	300
350	3814312A	358	340	350
400	3816312A	408	390	400
450	3818312A	458	440	450
500	3820312A	508	490	500
550	3822312A	558	540	550

упаковка 10 комп.

Установка ящика

Сверление отверстий в задней стенке ящика

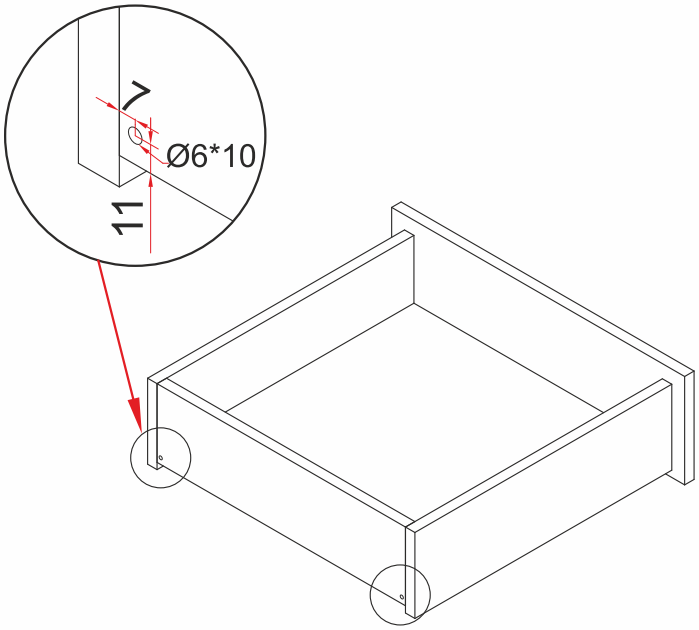

Вкрутить саморез под углом 25°

Крепёжный винт

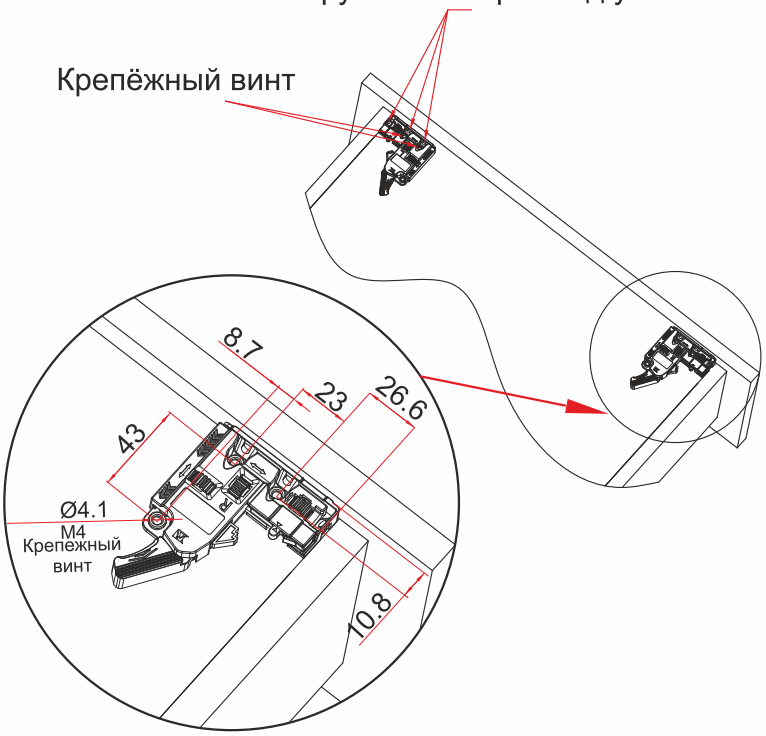

Сверление отверстий в дне ящика

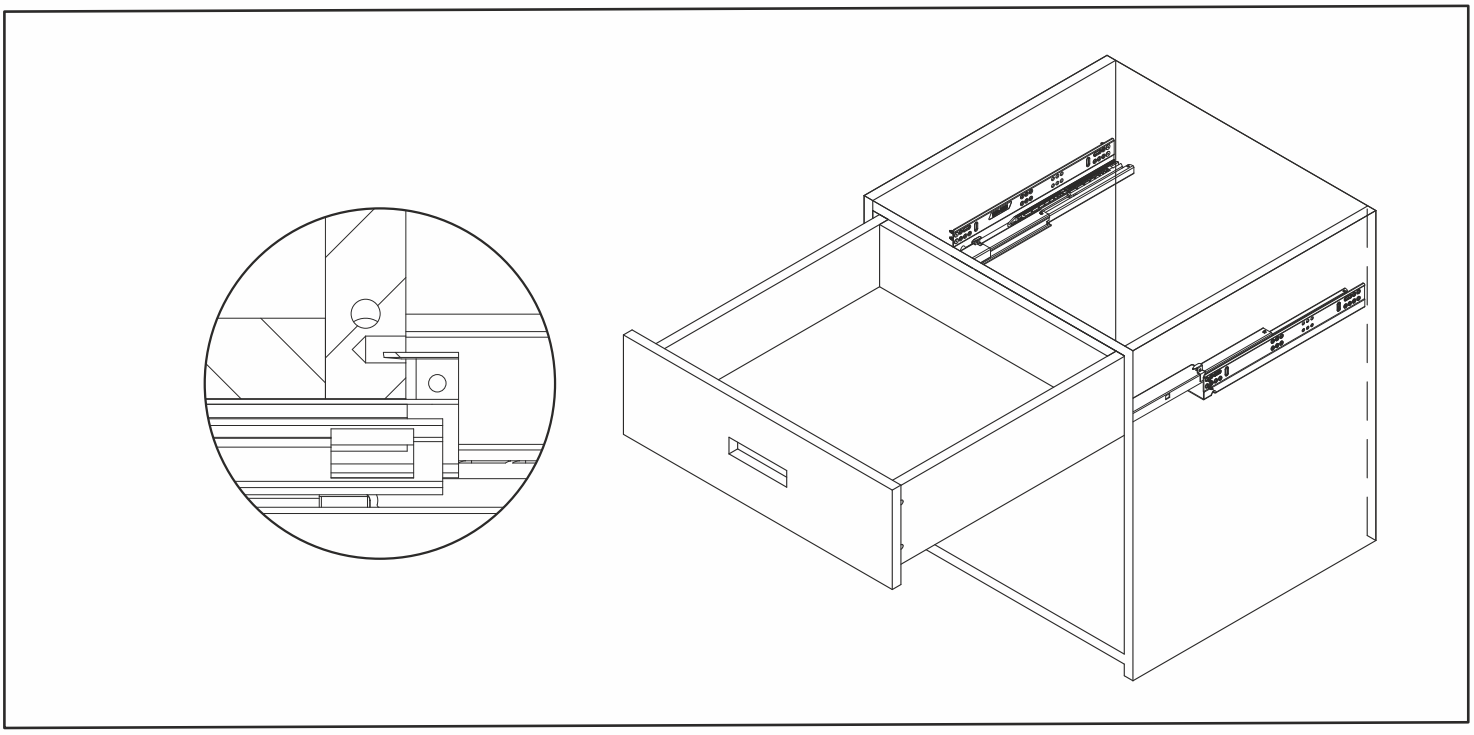

Регулировка ящика

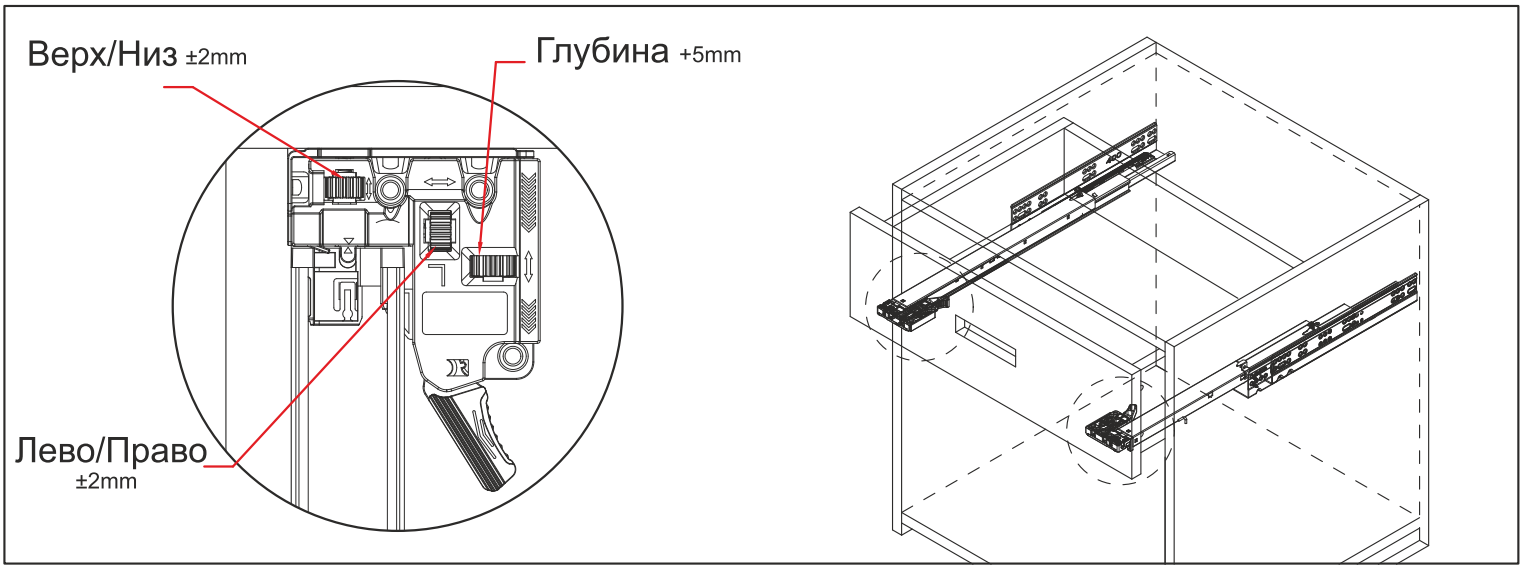

Демонтаж ящика

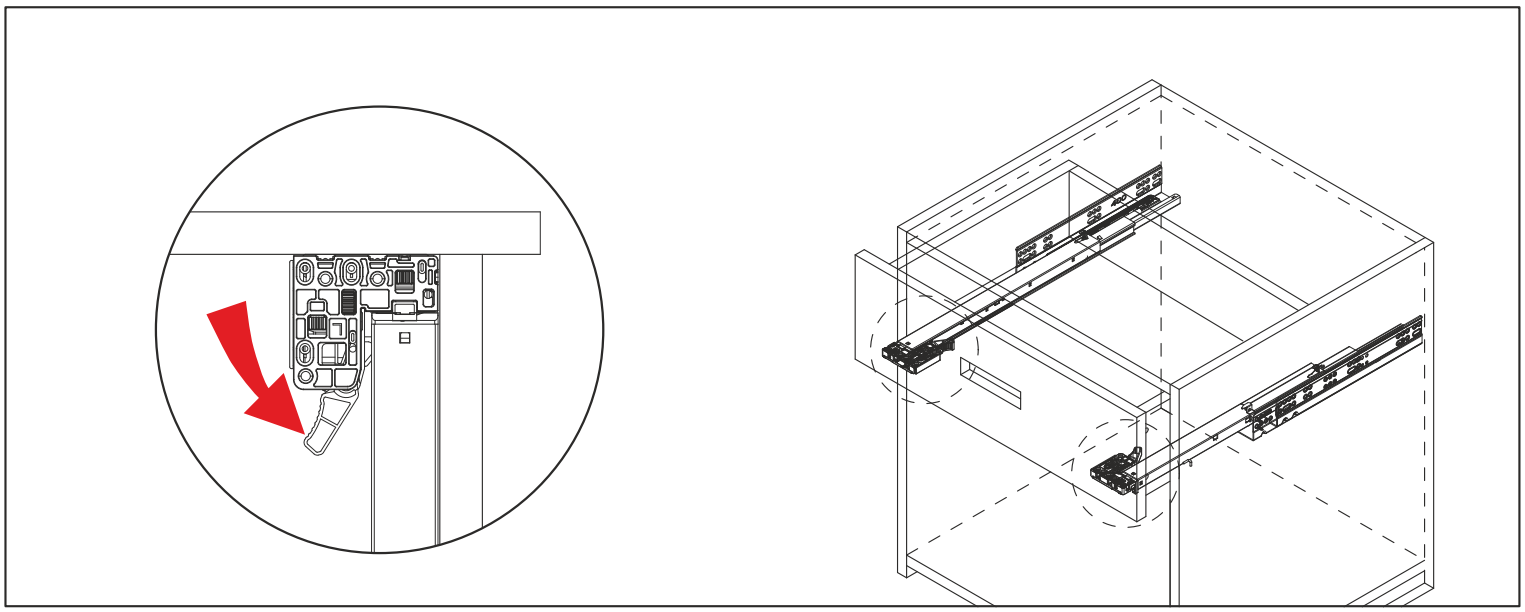

СЕРТИФИКАТЫ ИСПЫТАНИЙ SGS (ШВЕЙЦАРИЯ)

SGS

TEST REPORT

No. : SZIN2506001395ML01_EN
Date : 2025-07-01
Page: 1 of 3

CUSTOMER NAME: GUANGZHOU JINIO TECHNOLOGY DEVELOPMENT CO., LTD.
ADDRESS: FLOOR 5, BUILDING A, NO.83 KAIYUAN AVENUE, HUANGPU DISTRICT, GUANGZHOU CITY, GUANGDONG PROVINCE

Sample Name : Cam Lock Fitting
Model No. : 1208001

Above information and sample(s) was/were submitted and confirmed by the client. SGS, however, assumes no responsibility to verify the accuracy, adequacy and completeness of the sample information provided by client.

****

Date of Receipt : 2025-06-25
Testing Period : 2025-06-25 ~ 2025-07-01
Test result(s) : For further details, please refer to the following page(s) (Unless otherwise stated the results shown in this test report refer only to the sample(s) tested)

Signed for
SGS-CSTC Standards Technical
Services Co., Ltd. ShenZhen Branch.

Clare

Clare Lu
Authorized signatory

Unless otherwise agreed in writing, this document is issued by the Company subject to its General Conditions of Service printed overleaf, available on request or accessible at https://www.sgs.com/en/Terms-and-Conditions. Attention is drawn to the limitation of liability, indemnification and jurisdiction issues defined therein. Any holder of this document is advised that information contained hereon reflects the Company's findings at the time of its intervention only and within the limits of Client's instructions, if any. The Company's sole responsibility is to its Client and this document does not exonerate parties to a transaction from exercising all their rights and obligations under the transaction documents. This document cannot be reproduced except in full, without prior written approval of the Company. Any unauthorized alteration, forgery or falsification of the content or appearance of this document is unlawful and offenders may be prosecuted to the fullest extent of the law. Unless otherwise stated the results shown in this test report refer only to the sample(s) tested and such sample(s) are retained for 30 days only.
Attention: To check the authenticity of testing /inspection report & certificate, please contact us at telephone: (86-755) 8307 1443, or email: CN.Doccheck@sgs.com
Member of the SGS Group (SGS SA)

SGS

TEST REPORT

No. : SZIN2506001395ML01_EN
Date : 2025-07-01
Page: 2 of 3

Summary of Results:

No.	Test Item	Test Method	Result
1	Neutral salt spray test (NSS)	GB/T 10125-2021	See test result

Original Sample Photo:

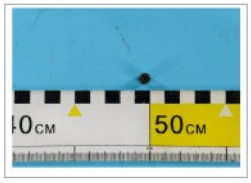

Unless otherwise agreed in writing, this document is issued by the Company subject to its General Conditions of Service printed overleaf, available on request or accessible at https://www.sgs.com/en/Terms-and-Conditions. Attention is drawn to the limitation of liability, indemnification and jurisdiction issues defined therein. Any holder of this document is advised that information contained hereon reflects the Company's findings at the time of its intervention only and within the limits of Client's instructions, if any. The Company's sole responsibility is to its Client and this document does not exonerate parties to a transaction from exercising all their rights and obligations under the transaction documents. This document cannot be reproduced except in full, without prior written approval of the Company. Any unauthorized alteration, forgery or falsification of the content or appearance of this document is unlawful and offenders may be prosecuted to the fullest extent of the law. Unless otherwise stated the results shown in this test report refer only to the sample(s) tested and such sample(s) are retained for 30 days only.
Attention: To check the authenticity of testing /inspection report & certificate, please contact us at telephone: (86-755) 8307 1443, or email: CN.Doccheck@sgs.com
Member of the SGS Group (SGS SA)

SGS

TEST REPORT

No. : SZIN2506001395ML01_EN
Date : 2025-07-01
Page: 3 of 3

Neutral Salt Spray Test (NSS):
Test Method: GB/T 10125-2021
Concentration of solution collected: (50±5) g/L NaCl
Chamber temperature: (35±2) °C
Volume of salt solution collected: (1.5±0.5) ml /(80cm² h)
pH of collected solution at (25±2) °C: 6.5~7.2
Exposure period: 16h
Test results:

Sample	Appearance
001-#1	No Visible corrosion
001-#2	No visible corrosion
001-#3	No visible corrosion

Neutral Salt Spray Test Photos:

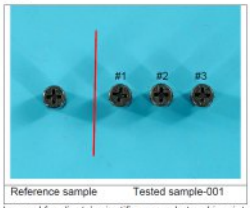

Reference sample Tested sample-001

The test report shall only be used for clients' scientific research, teaching, internal quality control, product research and development, etc... and just for internal reference.

********End of report********

Unless otherwise agreed in writing, this document is issued by the Company subject to its General Conditions of Service printed overleaf, available on request or accessible at https://www.sgs.com/en/Terms-and-Conditions. Attention is drawn to the limitation of liability, indemnification and jurisdiction issues defined therein. Any holder of this document is advised that information contained hereon reflects the Company's findings at the time of its intervention only and within the limits of Client's instructions, if any. The Company's sole responsibility is to its Client and this document does not exonerate parties to a transaction from exercising all their rights and obligations under the transaction documents. This document cannot be reproduced except in full, without prior written approval of the Company. Any unauthorized alteration, forgery or falsification of the content or appearance of this document is unlawful and offenders may be prosecuted to the fullest extent of the law. Unless otherwise stated the results shown in this test report refer only to the sample(s) tested and such sample(s) are retained for 30 days only.
Attention: To check the authenticity of testing /inspection report & certificate, please contact us at telephone: (86-755) 8307 1443, or email: CN.Doccheck@sgs.com
Member of the SGS Group (SGS SA)

SGS

TEST REPORT

No. : SZIN2306000998ML01_EN
Date : 2023-06-15
Page: 1 of 3

CUSTOMER NAME: GUANGZHOU JINGNUO TECHNOLOGY DEVELOPMENT CO., LTD.
ADDRESS: 501-504, BUILDING A04, NO. 83, KAIYUAN AVENUE, HUANGPU DISTRICT, GUANGZHOU

Sample Name : Cam Lock Fitting

Above information and sample(s) was/were submitted and confirmed by the client. SGS, however, assumes no responsibility to verify the accuracy, adequacy and completeness of the sample information provided by client.

****

Date of Receipt : 2023-06-09
Testing Period : 2023-06-09 ~ 2023-06-15
Test result(s) : For further details, please refer to the following page(s) (Unless otherwise stated the results shown in this test report refer only to the sample(s) tested)

Signed for
SGS-CSTC Standards Technical
Services Co., Ltd. ShenZhen Branch.

Peter

Peter Lau
Authorized signatory

Unless otherwise agreed in writing, this document is issued by the Company subject to its General Conditions of Service printed overleaf, available on request or accessible at https://www.sgs.com/en/Terms-and-Conditions. Attention is drawn to the limitation of liability, indemnification and jurisdiction issues defined therein. Any holder of this document is advised that information contained hereon reflects the Company's findings at the time of its intervention only and within the limits of Client's instructions, if any. The Company's sole responsibility is to its Client and this document does not exonerate parties to a transaction from exercising all their rights and obligations under the transaction documents. This document cannot be reproduced except in full, without prior written approval of the Company. Any unauthorized alteration, forgery or falsification of the content or appearance of this document is unlawful and offenders may be prosecuted to the fullest extent of the law. Unless otherwise stated the results shown in this test report refer only to the sample(s) tested and such sample(s) are retained for 30 days only.
Attention: To check the authenticity of testing /inspection report & certificate, please contact us at telephone: (86-755) 8307 1443, or email: CN.Doccheck@sgs.com
Member of the SGS Group (SGS SA)

SGS

TEST REPORT

No. : SZIN2306000998ML01_EN
Date : 2023-06-15

Tensile test of connecting fitting:

Reference method: GB/T 28203- 2011, clause 6.4.3

Test result

Sample No.	Requirement	Result (N)	Conclusion
001	≥ 700 N	1346	Pass

Note: The requirement is referred to GB/T 28203- 2011, clause 5.4.3.

Test photo



Before test

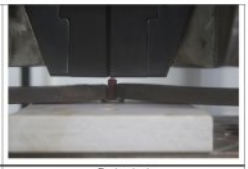

During test



After test

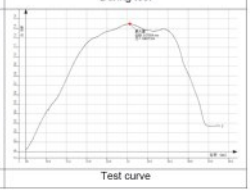

Test curve

Unless otherwise agreed in writing, this document is issued by the Company subject to its General Conditions of Service printed overleaf, available on request or accessible at https://www.sgs.com/en/Terms-and-Conditions. Attention is drawn to the limitation of liability, indemnification and jurisdiction issues defined therein. Any holder of this document is advised that information contained hereon reflects the Company's findings at the time of its intervention only and within the limits of Client's instructions, if any. The Company's sole responsibility is to its Client and this document does not exonerate parties to a transaction from exercising all their rights and obligations under the transaction documents. This document cannot be reproduced except in full, without prior written approval of the Company. Any unauthorized alteration, forgery or falsification of the content or appearance of this document is unlawful and offenders may be prosecuted to the fullest extent of the law. Unless otherwise stated the results shown in this test report refer only to the sample(s) tested and such sample(s) are retained for 30 days only.
Attention: To check the authenticity of testing /inspection report & certificate, please contact us at telephone: (86-755) 8307 1443, or email: CN.Doccheck@sgs.com
SGS-CSTC Standards Technical Services Co., Ltd. Shenzhen Branch
中国·广东·深圳市经济技术开发区(南区)五环路3号深圳出口加工区(南区)SGS大楼 邮编: 518067 t (86-755) 2320 8671 www.sgsgroup.com.cn sgs.china@sgs.com

Member of the SGS Group (SGS SA)

SGS

TEST REPORT

No. : SZIN2306000998ML01_EN
Date : 2023-06-15



Sample Photo

Appendix information:

The test report shall only be used for clients' scientific research, teaching, internal quality control, product research and development, etc… and just for internal reference.

********End of report********

Unless otherwise agreed in writing, this document is issued by the Company subject to its General Conditions of Service printed overleaf, available on request or accessible at https://www.sgs.com/en/Terms-and-Conditions. Attention is drawn to the limitation of liability, indemnification and jurisdiction issues defined therein. Any holder of this document is advised that information contained hereon reflects the Company's findings at the time of its intervention only and within the limits of Client's instructions, if any. The Company's sole responsibility is to its Client and this document does not exonerate parties to a transaction from exercising all their rights and obligations under the transaction documents. This document cannot be reproduced except in full, without prior written approval of the Company. Any unauthorized alteration, forgery or falsification of the content or appearance of this document is unlawful and offenders may be prosecuted to the fullest extent of the law. Unless otherwise stated the results shown in this test report refer only to the sample(s) tested and such sample(s) are retained for 30 days only.
Attention: To check the authenticity of testing /inspection report & certificate, please contact us at telephone: (86-755) 8307 1443, or email: CN.Doccheck@sgs.com
SGS-CSTC Standards Technical Services Co., Ltd. Shenzhen Branch
中国·广东·深圳市经济技术开发区(南区)五环路3号深圳出口加工区(南区)SGS大楼 邮编: 518067 t (86-755) 2320 8671 www.sgsgroup.com.cn sgs.china@sgs.com

Member of the SGS Group (SGS SA)

SGS

TEST REPORT

No. : SZIN2306000976ML01-1_EN
Date : 2023-06-19

CUSTOMER NAME: GUANGZHOU JINGNUO TECHNOLOGY DEVELOPMENT CO., LTD.

ADDRESS: 501-504, BUILDING A04, NO. 83, KAIYUAN AVENUE, HUANGPU DISTRICT, GUANGZHOU

Sample Name : Cam Lock Fitting

Above information and sample(s) was/were submitted and confirmed by the client. SGS, however, assumes no responsibility to verify the accuracy, adequacy and completeness of the sample information provided by client.

****

Date of Receipt : 2023-06-08

Testing Period : 2023-06-08~2023-06-15

Test result(s) : For further details, please refer to the following page(s) (Unless otherwise stated the results shown in this test report refer only to the sample(s) tested)

Signed for
SGS-CSTC Standards Technical
Services Co., Ltd. ShenZhen Branch.

Peter

Peter Lau
Authorized signatory

Unless otherwise agreed in writing, this document is issued by the Company subject to its General Conditions of Service printed overleaf, available on request or accessible at https://www.sgs.com/en/Terms-and-Conditions. Attention is drawn to the limitation of liability, indemnification and jurisdiction issues defined therein. Any holder of this document is advised that information contained hereon reflects the Company's findings at the time of its intervention only and within the limits of Client's instructions, if any. The Company's sole responsibility is to its Client and this document does not exonerate parties to a transaction from exercising all their rights and obligations under the transaction documents. This document cannot be reproduced except in full, without prior written approval of the Company. Any unauthorized alteration, forgery or falsification of the content or appearance of this document is unlawful and offenders may be prosecuted to the fullest extent of the law. Unless otherwise stated the results shown in this test report refer only to the sample(s) tested and such sample(s) are retained for 30 days only.
Attention: To check the authenticity of testing /inspection report & certificate, please contact us at telephone: (86-755) 8307 1443, or email: CN.Doccheck@sgs.com
SGS-CSTC Standards Technical Services Co., Ltd. Shenzhen Branch
中国·广东·深圳市经济技术开发区(南区)五环路3号深圳出口加工区(南区)SGS大楼 邮编: 518067 t (86-755) 2320 8671 www.sgsgroup.com.cn sgs.china@sgs.com

Member of the SGS Group (SGS SA)

SGS

TEST REPORT

No. : SZIN2306000976ML01-1_EN
Date : 2023-06-19

1. Compression test of connecting fitting:

Reference method: GB/T 28203- 2011, clause 6.4.1

Test result:

Sample No.	Requirement	Result (N)	Conclusion
001	≥ 240 N	792	Pass

Note: The requirement is referred to GB/T 28203-2011, clause 5.4.1.

Test photo



Before test



During test



After test

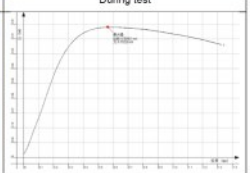

Test curve

Unless otherwise agreed in writing, this document is issued by the Company subject to its General Conditions of Service printed overleaf, available on request or accessible at https://www.sgs.com/en/Terms-and-Conditions. Attention is drawn to the limitation of liability, indemnification and jurisdiction issues defined therein. Any holder of this document is advised that information contained hereon reflects the Company's findings at the time of its intervention only and within the limits of Client's instructions, if any. The Company's sole responsibility is to its Client and this document does not exonerate parties to a transaction from exercising all their rights and obligations under the transaction documents. This document cannot be reproduced except in full, without prior written approval of the Company. Any unauthorized alteration, forgery or falsification of the content or appearance of this document is unlawful and offenders may be prosecuted to the fullest extent of the law. Unless otherwise stated the results shown in this test report refer only to the sample(s) tested and such sample(s) are retained for 30 days only.
Attention: To check the authenticity of testing /inspection report & certificate, please contact us at telephone: (86-755) 8307 1443, or email: CN.Doccheck@sgs.com
SGS-CSTC Standards Technical Services Co., Ltd. Shenzhen Branch
中国·广东·深圳市经济技术开发区(南区)五环路3号深圳出口加工区(南区)SGS大楼 邮编: 518067 t (86-755) 2320 8671 www.sgsgroup.com.cn sgs.china@sgs.com

Member of the SGS Group (SGS SA)

精诺 JINIO

TARGET

SGS

TEST REPORT

No. : SZIN2306000976ML01-1_EN
Date : 2023-06-19

2. Torque test of connecting fitting:

Reference method: GB/T 28203- 2011, clause 6.4.4

Test result

Sample No.	Requirement	Result (N.m)	Conclusion
001	≥4.0 N.m	8.5	Pass

Note:

1. The client claimed nominal diameter of the cam is 8 millimeters,
2. The requirement is referred to GB/T 28203- 2011, clause 5.4.4.

Test photo

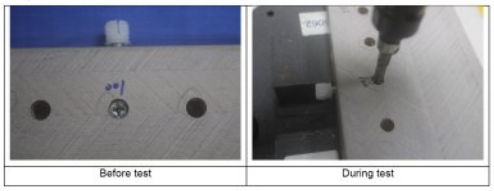

Before test | During test

Unless otherwise agreed in writing, this document is issued by the Company subject to its General Conditions of Service printed overleaf, available on request or accessible at https://www.sgs.com/en/Terms-and-Conditions. Attention is drawn to the limitation of liability, indemnification and jurisdiction issues defined therein. Any holder of this document is advised that information contained hereon reflects the Company's findings at the time of its intervention only and within the limits of Client's instructions, if any. The Company's sole responsibility is to its Client and this document does not exonerate parties to a transaction from exercising all their rights and obligations under the transaction documents. This document cannot be reproduced except in full, without prior written approval of the Company. Any unauthorized alteration, forgery or falsification of the content or appearance of this document is unlawful and offenders may be prosecuted to the fullest extent of the law. Unless otherwise stated the results shown in this test report refer only to the sample(s) tested and such sample(s) are retained for 30 days only.
Attention: To check the authenticity of testing /inspection report & certificate, please contact us at telephone: (86-755) 8307 1443, or email: CN.Doccheck@sgs.com
SGS-CSTC Standards Technical Services Co., Ltd. Shunde Branch
1/2F, Building 1, European Industrial Park, No.1, Shunbe South Road, Wusha, Daliang, Shunde District, Foshan, Guangdong, China 528300 t (86-757) 22809888 www.sgsgroup.com.cn
中国·广东·佛山市顺德区大良德善路9号意大利工业区第1栋1/2层 邮编: 528300 t (86-757) 22809888 sgs.china@sgs.com
Member of the SGS Group (SGS SA)

SGS

TEST REPORT

No. : SZIN2306000976ML01-1_EN
Date : 2023-06-19

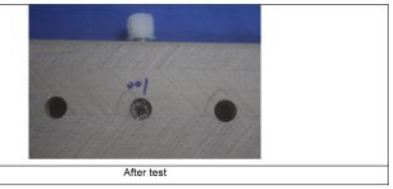

After test



Sample Photo

Appendix information:

1. The test report shall only be used for clients' scientific research, teaching, internal quality control, product research and development, etc… and just for internal reference.
2. This test report updates Sample Name, supersedes the test report No. SZIN2306000976ML01_EN dated 2023-06-15, original report will be invalid from today.

********End of report********

Unless otherwise agreed in writing, this document is issued by the Company subject to its General Conditions of Service printed overleaf, available on request or accessible at https://www.sgs.com/en/Terms-and-Conditions. Attention is drawn to the limitation of liability, indemnification and jurisdiction issues defined therein. Any holder of this document is advised that information contained hereon reflects the Company's findings at the time of its intervention only and within the limits of Client's instructions, if any. The Company's sole responsibility is to its Client and this document does not exonerate parties to a transaction from exercising all their rights and obligations under the transaction documents. This document cannot be reproduced except in full, without prior written approval of the Company. Any unauthorized alteration, forgery or falsification of the content or appearance of this document is unlawful and offenders may be prosecuted to the fullest extent of the law. Unless otherwise stated the results shown in this test report refer only to the sample(s) tested and such sample(s) are retained for 30 days only.
Attention: To check the authenticity of testing /inspection report & certificate, please contact us at telephone: (86-755) 8307 1443, or email: CN.Doccheck@sgs.com
SGS-CSTC Standards Technical Services Co., Ltd. Shunde Branch
1/2F, Building 1, European Industrial Park, No.1, Shunbe South Road, Wusha, Daliang, Shunde District, Foshan, Guangdong, China 528300 t (86-757) 22809888 www.sgsgroup.com.cn
中国·广东·佛山市顺德区大良德善路9号意大利工业区第1栋1/2层 邮编: 528300 t (86-757) 22809888 sgs.china@sgs.com
Member of the SGS Group (SGS SA)

SGS

Test Report No.SDHL250701198801FT Date: Jul 25, 2025 Page 1 of 3

GUANGZHOU JINIO TECHNOLOGY DEVELOPMENT CO., LTD.
FLOOR 5, BUILDING A, NO.83 KAIYUAN AVENUE, HUANGPU DISTRICT,
GUANGZHOU CITY, GUANGDONG PROVINCE

Sample Description : SHELF SUPPORT
Item No. : J10-C

As above test item and its relevant information regarding to the submission are provided and confirmed by the applicant. SGS is not liable to either the test item or its relevant information, in terms of the accuracy, suitability, reliability or/and integrity accordingly.

****

Sample Receiving Date : Jul 09, 2025
Test Performing Date : Jul 09, 2025 to Jul 25, 2025
Test Performed : Selected test(s) as requested by applicant

Test Result Summary

No.	Test(s) Requested	Result(s)	Comments
1	Clause 6.3 of EN 16337:2013 (E)	PASS	/
For further details, please refer to the following page(s)			

Signed for and on behalf of
SGS-CSTC Standards Technical Services Co., Ltd. Shunde Branch

Marco Leung

Marco Leung
Authorized Signatory

Scan to see the report

Unless otherwise agreed in writing, this document is issued by the Company subject to its General Conditions of Service printed overleaf, available on request or accessible at https://www.sgs.com/en/Terms-and-Conditions. Attention is drawn to the limitation of liability, indemnification and jurisdiction issues defined therein. Any holder of this document is advised that information contained hereon reflects the Company's findings at the time of its intervention only and within the limits of Client's instructions, if any. The Company's sole responsibility is to its Client and this document does not exonerate parties to a transaction from exercising all their rights and obligations under the transaction documents. This document cannot be reproduced except in full, without prior written approval of the Company. Any unauthorized alteration, forgery or falsification of the content or appearance of this document is unlawful and offenders may be prosecuted to the fullest extent of the law. Unless otherwise stated the results shown in this test report refer only to the sample(s) tested and such sample(s) are retained for 30 days only.
Attention: To check the authenticity of testing /inspection report & certificate, please contact us at telephone: (86-755) 8307 1443, or email: CN.Doccheck@sgs.com
SGS-CSTC Standards Technical Services Co., Ltd. Shunde Branch
1/2F, Building 1, European Industrial Park, No.1, Shunbe South Road, Wusha, Daliang, Shunde District, Foshan, Guangdong, China 528300 t (86-757) 22809888 www.sgsgroup.com.cn
中国·广东·佛山市顺德区大良德善路9号意大利工业区第1栋1/2层 邮编: 528300 t (86-757) 22809888 sgs.china@sgs.com
Member of the SGS Group (SGS SA)

SGS

Test Report No.SDHL250701198801FT Date: Jul 25, 2025 Page 2 of 3

TESTS AND RESULTS

Test Conducted:
Clause 6.3 of EN 16337:2013 (E)

No. of Sample:
1 set. For more sample information and pictures, please refer to the following page.

Test and Requirements	Test Results
6.3.2 Impact test For wall mounted shelf supports record the inclination of the unloaded shelf. The test load shall be the loading capacity, M (3.1) × the number of shelf supports × 2. The test load shall include the weight of the shelf. The test load shall be distributed on the shelf without impacts, so that the impact plate (see Annex B) can be tipped over as shown in Figure 3. The impact shall be directly above each shelf support (see Figure 4 and Figure 5). Each shelf support shall be tested a total of 10 times. For wall mounted shelf supports, the impact test shall be carried out both at the front (5 ×) and at the rear (5 ×) of the shelf support. Assessment shall be carried out according to 6.2.	PASS Test load: 76 kg
6.3.3 Sustained load test Re-distribute the test load (6.3.2) without impacts, so that it is uniformly distributed over the whole shelf area. The loading time shall be one week. After the test with the load on, measure the inclination of the shelf of wall mounted shelf supports. Assessment shall be carried out according to 6.2.	PASS Test load: 76 kg

Remark:
1. The dimension of testing shelf is 1000 mm W x 300 mm D x 19 mm T;
2. For the sample information and pictures, please refer to the following page.

Unless otherwise agreed in writing, this document is issued by the Company subject to its General Conditions of Service printed overleaf, available on request or accessible at https://www.sgs.com/en/Terms-and-Conditions. Attention is drawn to the limitation of liability, indemnification and jurisdiction issues defined therein. Any holder of this document is advised that information contained hereon reflects the Company's findings at the time of its intervention only and within the limits of Client's instructions, if any. The Company's sole responsibility is to its Client and this document does not exonerate parties to a transaction from exercising all their rights and obligations under the transaction documents. This document cannot be reproduced except in full, without prior written approval of the Company. Any unauthorized alteration, forgery or falsification of the content or appearance of this document is unlawful and offenders may be prosecuted to the fullest extent of the law. Unless otherwise stated the results shown in this test report refer only to the sample(s) tested and such sample(s) are retained for 30 days only.
Attention: To check the authenticity of testing /inspection report & certificate, please contact us at telephone: (86-755) 8307 1443, or email: CN.Doccheck@sgs.com
SGS-CSTC Standards Technical Services Co., Ltd. Shunde Branch
1/2F, Building 1, European Industrial Park, No.1, Shunbe South Road, Wusha, Daliang, Shunde District, Foshan, Guangdong, China 528300 t (86-757) 22809888 www.sgsgroup.com.cn
中国·广东·佛山市顺德区大良德善路9号意大利工业区第1栋1/2层 邮编: 528300 t (86-757) 22809888 sgs.china@sgs.com
Member of the SGS Group (SGS SA)

SGS

Test Report No.SDHL250701198801FT Date: Jul 25, 2025

SAMPLE INFORMATION AND PICTURES

Weight: 19.5 g/set

Sample as Received


View 1


View 2


View 3


View 4

Unless otherwise stated, the decision rule for conformity reporting is based on Binary Statement for Simple Acceptance Rule (w=0) stated in ILAC-G8:09/2019.

End of Report

Unless otherwise agreed in writing, this document is issued by the Company subject to its General Conditions of Service printed overleaf, available on request or accessible at https://www.sgs.com/en/Terms-and-Conditions. Attention is drawn to the limitation of liability, indemnification and jurisdiction issues defined therein. Any holder of this document is advised that information contained hereon reflects the Company's findings at the time of its intervention only and within the limits of Client's instructions, if any. The Company's sole responsibility is to its Client and this document does not exonerate parties to a transaction from exercising all their rights and obligations under the transaction documents. This document cannot be reproduced except in full, without prior written approval of the Company. Any unauthorized alteration, forgery or falsification of the content or appearance of this document is unlawful and offenders may be prosecuted to the fullest extent of the law. Unless otherwise stated the results shown in this test report refer only to the sample(s) tested and such sample(s) are retained for 30 days only.
Attention: To check the authenticity of testing /inspection report & certificate, please contact us at telephone: (86-755) 8307 1443, or email: CN.Doccheck@sgs.com
1-2/F., Building 1, European Industrial Park, No.1, Shuzhe South Road, Wusha, Dalang, Shunde District, Foshan, Guangdong, China 528000 t (86-757) 22809388 www.sgsgroup.com.cn
中国·广东·佛山市顺德区大良街道五沙社区东区道路南侧和平路北侧欧洲工业园1号厂房第1、二层 邮编: 528000 t (86-757) 22809388 sgs.china@sgs.com
Member of the SGS Group (SGS SA)

SGS

TEST REPORT

No. : SZIN2507001688ML01_EN
Date : 2025-08-01
Page: 1 of 3

CUSTOMER NAME: GUANGZHOU JINIO TECHNOLOGY DEVELOPMENT CO., LTD.
ADDRESS: FLOOR 5, BUILDING A, NO.83 KAIYUAN AVENUE, HUANGPU DISTRICT, GUANGZHOU CITY, GUANGDONG PROVINCE

Sample Name : Cam Lock Fitting
Item No. : 0000068

Above information and sample(s) was/were submitted and confirmed by the client. SGS, however, assumes no responsibility to verify the accuracy, adequacy and completeness of the sample information provided by client.

****

Date of Receipt : 2025-07-28
Testing Period : 2025-07-28 ~ 2025-08-01
Test result(s) : For further details, please refer to the following page(s) (Unless otherwise stated the results shown in this test report refer only to the sample(s) tested)

Signed for
SGS-CSTC Standards Technical Services Co., Ltd. ShenZhen Branch.

Clare

Clare Lu
Authorized signatory

Unless otherwise agreed in writing, this document is issued by the Company subject to its General Conditions of Service printed overleaf, available on request or accessible at https://www.sgs.com/en/Terms-and-Conditions. Attention is drawn to the limitation of liability, indemnification and jurisdiction issues defined therein. Any holder of this document is advised that information contained hereon reflects the Company's findings at the time of its intervention only and within the limits of Client's instructions, if any. The Company's sole responsibility is to its Client and this document does not exonerate parties to a transaction from exercising all their rights and obligations under the transaction documents. This document cannot be reproduced except in full, without prior written approval of the Company. Any unauthorized alteration, forgery or falsification of the content or appearance of this document is unlawful and offenders may be prosecuted to the fullest extent of the law. Unless otherwise stated the results shown in this test report refer only to the sample(s) tested and such sample(s) are retained for 30 days only.
Attention: To check the authenticity of testing /inspection report & certificate, please contact us at telephone: (86-755) 8307 1443, or email: CN.Doccheck@sgs.com
Member of the SGS Group (SGS SA)

SGS

TEST REPORT

No. : SZIN2507001688ML01_EN
Date : 2025-08-01
Page: 2 of 3

Tensile test of connecting fitting:

Reference method: GB/T 28203- 2011, clause 6.4.3

Test result

Sample No.	Result (N)
001	1419

Test photo:

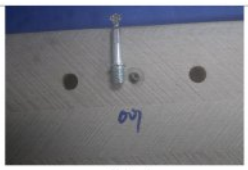
After test

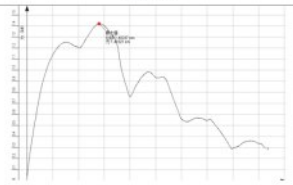

Unless otherwise agreed in writing, this document is issued by the Company subject to its General Conditions of Service printed overleaf, available on request or accessible at https://www.sgs.com/en/Terms-and-Conditions. Attention is drawn to the limitation of liability, indemnification and jurisdiction issues defined therein. Any holder of this document is advised that information contained hereon reflects the Company's findings at the time of its intervention only and within the limits of Client's instructions, if any. The Company's sole responsibility is to its Client and this document does not exonerate parties to a transaction from exercising all their rights and obligations under the transaction documents. This document cannot be reproduced except in full, without prior written approval of the Company. Any unauthorized alteration, forgery or falsification of the content or appearance of this document is unlawful and offenders may be prosecuted to the fullest extent of the law. Unless otherwise stated the results shown in this test report refer only to the sample(s) tested and such sample(s) are retained for 30 days only.
Attention: To check the authenticity of testing /inspection report & certificate, please contact us at telephone: (86-755) 8307 1443, or email: CN.Doccheck@sgs.com
Member of the SGS Group (SGS SA)

SGS

TEST REPORT

No. : SZIN2507001688ML01_EN
Date : 2025-08-01
Page: 3 of 3

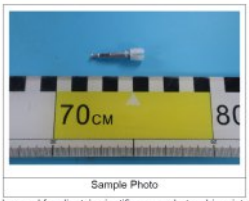

Sample Photo

The test report shall only be used for clients' scientific research, teaching, internal quality control, product research and development, etc… and just for internal reference.

********End of report********

Unless otherwise agreed in writing, this document is issued by the Company subject to its General Conditions of Service printed overleaf, available on request or accessible at https://www.sgs.com/en/Terms-and-Conditions. Attention is drawn to the limitation of liability, indemnification and jurisdiction issues defined therein. Any holder of this document is advised that information contained hereon reflects the Company's findings at the time of its intervention only and within the limits of Client's instructions, if any. The Company's sole responsibility is to its Client and this document does not exonerate parties to a transaction from exercising all their rights and obligations under the transaction documents. This document cannot be reproduced except in full, without prior written approval of the Company. Any unauthorized alteration, forgery or falsification of the content or appearance of this document is unlawful and offenders may be prosecuted to the fullest extent of the law. Unless otherwise stated the results shown in this test report refer only to the sample(s) tested and such sample(s) are retained for 30 days only.
Attention: To check the authenticity of testing /inspection report & certificate, please contact us at telephone: (86-755) 8307 1443, or email: CN.Doccheck@sgs.com
Member of the SGS Group (SGS SA)

精诺 JINIO
TARGET

SGS

TEST REPORT

No. : SZIN2507001688ML04_EN
Date : 2025-08-06
Page: 1 of 3

CUSTOMER NAME: GUANGZHOU JINIO TECHNOLOGY DEVELOPMENT CO., LTD.
ADDRESS: FLOOR 5, BUILDING A, NO.83 KAIYUAN AVENUE, HUANGPU DISTRICT, GUANGZHOU CITY, GUANGDONG PROVINCE

Sample Name : Cam Lock Fitting
Item No. : 6001000B

Above information and sample(s) was/were submitted and confirmed by the client. SGS, however, assumes no responsibility to verify the accuracy, adequacy and completeness of the sample information provided by client.

****

Date of Receipt : 2025-07-28
Testing Period : 2025-07-28 ~ 2025-08-01
Test result(s) : For further details, please refer to the following page(s) (Unless otherwise stated the results shown in this test report refer only to the sample(s) tested)

Signed for
SGS-CSTC Standards Technical Services Co., Ltd. ShenZhen Branch.

Dallas Zou
Authorized signatory

Unless otherwise agreed in writing, this document is issued by the Company subject to its General Conditions of Service printed overleaf, available on request or accessible at https://www.sgs.com/en/Terms-and-Conditions. Attention is drawn to the limitation of liability, indemnification and jurisdiction issues defined therein. Any holder of this document is advised that information contained hereon reflects the Company's findings at the time of its intervention only and within the limits of Client's instructions, if any. The Company's sole responsibility is to its Client and this document does not exonerate parties to a transaction from exercising all their rights and obligations under the transaction documents. This document cannot be reproduced except in full, without prior written approval of the Company. Any unauthorized alteration, forgery or falsification of the content or appearance of this document is unlawful and offenders may be prosecuted to the fullest extent of the law. Unless otherwise stated the results shown in this test report refer only to the sample(s) tested and such sample(s) are retained for 30 days only.
Attention: To check the authenticity of testing /inspection report & certificate, please contact us at telephone: (86-755) 8307 1443, or email: CN.Doccheck@sgs.com
Member of the SGS Group (SGS SA)

SGS

TEST REPORT

No. : SZIN2507001688ML04_EN
Date : 2025-08-06
Page: 2 of 3

Torque test of connecting fitting:
Reference method: GB/T 28203- 2011, clause 6.4.4
Test result:

Sample No.	Result (N.m)
002	6.3

Test photo:

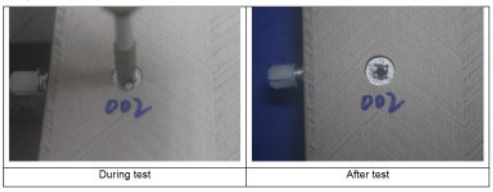

During test | After test

Unless otherwise agreed in writing, this document is issued by the Company subject to its General Conditions of Service printed overleaf, available on request or accessible at https://www.sgs.com/en/Terms-and-Conditions. Attention is drawn to the limitation of liability, indemnification and jurisdiction issues defined therein. Any holder of this document is advised that information contained hereon reflects the Company's findings at the time of its intervention only and within the limits of Client's instructions, if any. The Company's sole responsibility is to its Client and this document does not exonerate parties to a transaction from exercising all their rights and obligations under the transaction documents. This document cannot be reproduced except in full, without prior written approval of the Company. Any unauthorized alteration, forgery or falsification of the content or appearance of this document is unlawful and offenders may be prosecuted to the fullest extent of the law. Unless otherwise stated the results shown in this test report refer only to the sample(s) tested and such sample(s) are retained for 30 days only.
Attention: To check the authenticity of testing /inspection report & certificate, please contact us at telephone: (86-755) 8307 1443, or email: CN.Doccheck@sgs.com
Member of the SGS Group (SGS SA)

SGS

TEST REPORT

No. : SZIN2507001688ML04_EN
Date : 2025-08-06
Page: 3 of 3

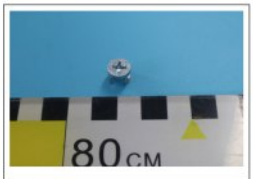

Sample Photo

Appendix information:

1.The test results in this test report were extracted from test report No.: SZIN2507001688ML02_EN dated: 2025-08-01.

2.The test report shall only be used for clients' scientific research, teaching, internal quality control, product research and development, etc... and just for internal reference.

********End of report********

Unless otherwise agreed in writing, this document is issued by the Company subject to its General Conditions of Service printed overleaf, available on request or accessible at https://www.sgs.com/en/Terms-and-Conditions. Attention is drawn to the limitation of liability, indemnification and jurisdiction issues defined therein. Any holder of this document is advised that information contained hereon reflects the Company's findings at the time of its intervention only and within the limits of Client's instructions, if any. The Company's sole responsibility is to its Client and this document does not exonerate parties to a transaction from exercising all their rights and obligations under the transaction documents. This document cannot be reproduced except in full, without prior written approval of the Company. Any unauthorized alteration, forgery or falsification of the content or appearance of this document is unlawful and offenders may be prosecuted to the fullest extent of the law. Unless otherwise stated the results shown in this test report refer only to the sample(s) tested and such sample(s) are retained for 30 days only.
Attention: To check the authenticity of testing /inspection report & certificate, please contact us at telephone: (86-755) 8307 1443, or email: CN.Doccheck@sgs.com
Member of the SGS Group (SGS SA)

Россия, 440505, Пензенская обл.
пос. Мичуринский,
ул. 40 лет Октября, 30
8 (8412) 45-87-97

Россия, 442530,
Пензенская обл.
г. Кузнецк, ул. Калинина, 92
+7 937 435 88 44

广东精诺五金实业有限公司

广州运营中心

广东省广州市黄埔区开源大道83号恒拓科技产业园A栋5层
电话：4006-999-189
网站：http://www.JINIO.co
邮箱：INFO@JINIO.CO

GUANGDONG JINIO HARDWARE INDUSTRIAL CO.,LTD

GUANGZHOU OPERATING CENTER

Floor 5, Building A, Hengtuo Science and Technology Industrial Park,
No.83 Kaiyuan Avenue, Huangpu District, Guangzhou City, Guangdong Province

TEL：4006-999-189
HTTP：//www.JINIO.co
E-MAIL：INFO@JINIO.CO

Channels

Official Accounts

E-mail: info@tgt-biz.ru